The Transistor Amplifier

P2

The Transistor Amplifier is available as a .pdf but this file is not updated as fast as the web page.
New items are added on a daily basis as we get a lot of requests from readers to help design a circuit and explain how a circuit works.
We have not opted for covering transistor circuit design as found in most text books because there are already many available on the web for free download.
We have decided to cover this topic in a completely different way, with a circuit to cover each explanation.
This way you will pick up all the pointers that the text books miss.
It's only after you start designing a circuit that you find out how little you have been supplied via conventional teaching and that's why our approach is so important.
If you look at some magazines you will find faults and poor descriptions in almost every one of their circuits.
No only is the designer poorly informed but the technical editor of the magazine is unaware of the mistakes and the readers do not reply with corrections. It's total ignorance ALL AROUND.
The Transistor Amplifier article will help you understand some of the faults and how to avoid them.
It's pointless learning about "LOAD LINES" etc and producing equations for all sorts of results when most transistors have gain-values that can be 200% more or 80% less than the chosen value.
The gain of a transistor falls 90% as the current increases and you have absolutely no idea what value to use until you build the circuit. By that time you have already solved your problem!
Secondly, it's pointless learning about equations until you have looked at the hundreds of different transistor circuits so you know what circuit to use.

TOPICS:

Voltage Divider
Voltage Doubler - the
Voltage to Current Converter
Voltage Regulator
Voltages - measuring Voltages
VOX - Voice Operated Switch
Zener Tester - How the ZENER DIODE works
Zener The transistor as a zener Regulator
1 watt LED - driving a high-power LED
12v CFL Driver - Flyback Circuit

THE DIFFERENTIAL AMPLIFIER
or
LONG TAILED PAIR

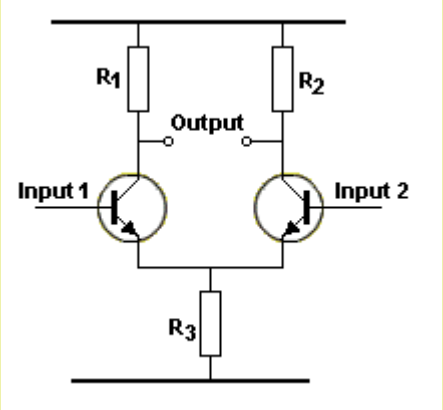

Fig 71ad

The **DIFFERENTIAL AMPLIFIER** is also called the **"Difference Amplifier"** or **long-tailed pair** (LTP), or **emitter-coupled pair,** because it amplifies the **difference** between the voltages on **Input 1** and **Input 2**. It is called a Long Tailed Pair because the emitter resistor has a high value. The circuit has the advantage of ONLY amplifying the signals on the Inputs. Any noise on the power rail is not detected on the output as both transistors will see this fluctuation and both outputs will either rise or fall and thus the output **will not change**.
Since the **Long Tailed Pair** does not pick up noise from the supply, it is ideal as a pre-amplifier as shown in the 60 watt amplifier in **Fig 71ae**:

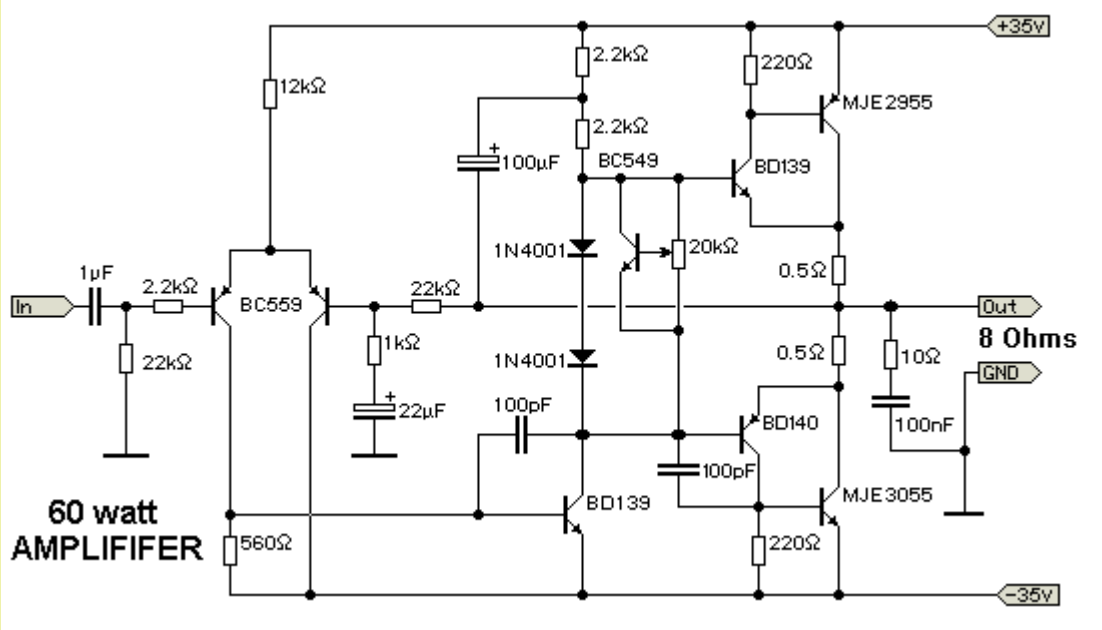

Fig 71ae

THE CONSTANT-CURRENT CIRCUIT

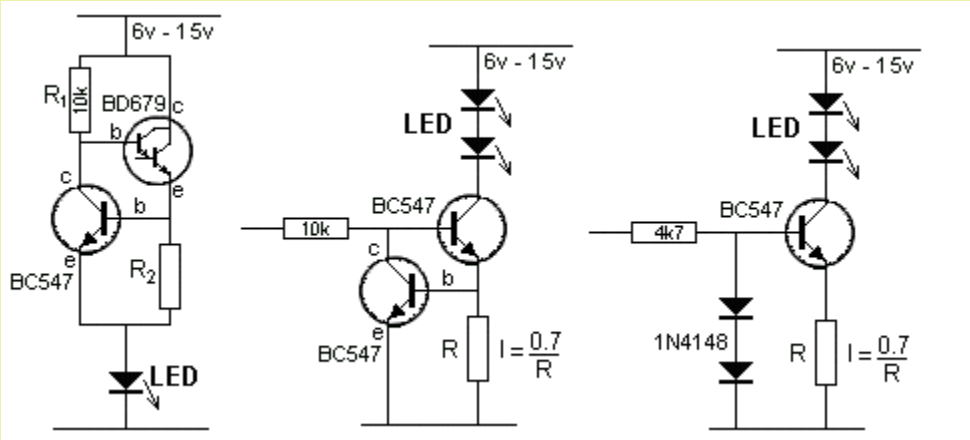

Fig 71a Constant-Current Circuits

The three circuits above provide a constant current through the LED (or LEDs) when the supply rises to 15v and higher. The second and third circuits can be turned on and off via the input line.

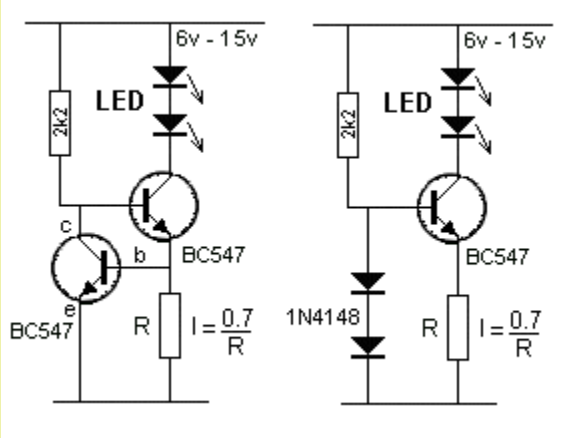

Fig 71b Constant-Current Circuit

The first circuit in **Fig 71b** is a constant-current arrangement, providing a fixed current to the LEDs, no matter the supply voltage.
This is done by turning on the top transistor via the 2k2 resistor. It keeps turning on until the voltage-drop across resistor **R** is 0.65v. At this point the lower transistor starts to turn on and current flows through the collector-emitter terminals and it "robs" the top transistor of current from the 2k2 resistor. The top transistor cannot turn on any more and the current flowing though R is the same as the current flowing through the LEDs and does not increase.

The second diagram in **Fig 71b** is also a constant-current circuit with the base fixed at:
0.7v + 0.7v = 1.4v via the two diodes.
The transistor is turned on via the 2k2 resistor and a voltage is developed across resistor **R**. When this voltage is 0.7v, the emitter is 0.7v above the 0v rail and the base is 1.4v. If the transistor turns on more, the emitter will be 0.8v above the 0v rail and this will only give 0.6v between base and emitter. The transistor would not be turned on with this voltage-drop, so the transistor cannot be turned on any more than 0.65v across the resistor **R**.

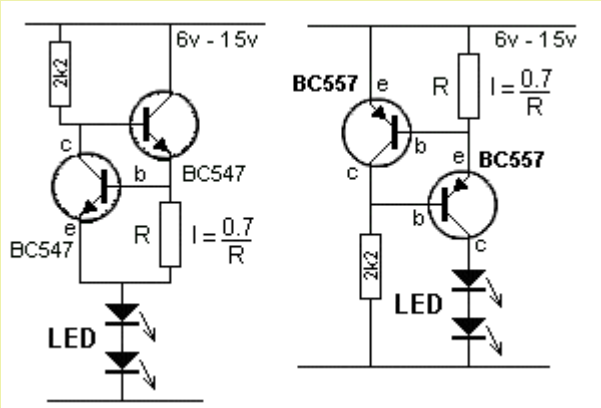

Fig 71ba Constant-Current Circuit

Fig 71ba shows two more constant current circuits "sourcing" the LEDs. The 7 constant current circuits give you the choice of either sourcing or sinking the LED current.

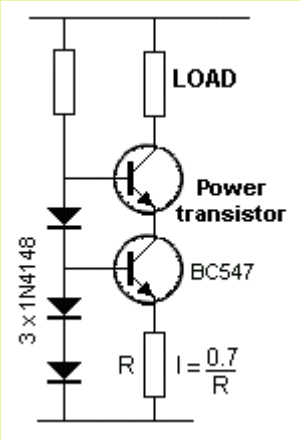

Fig 71bab Constant-Current Circuit for high voltage supply

If the supply voltage is high, the transistor controlling the current (BC547) will get hot and alter the current-flow.
Fig 71bab uses a POWER TRANSISTOR to dissipate the losses and the current-controlling transistor remains cold.

When the circuit turns ON, the current through R is zero and the voltage on the base of the BC547 turns it on fully. The voltage between collector and emitter is about 0.2v and this means the emitter of the power transistor is below the base of the BC547. The base of the power transistor is 0.7v above the base of the BC547 and the power transistor also turns on fully.
Current increases through R and when the voltage across R reaches 0.7v, The BC547 starts to turn OFF. The collector voltage rises and this starts to turn OFF the power transistor. This is how the current through the LOAD is limited by the value of R.

THE CURRENT MIRROR CIRCUIT

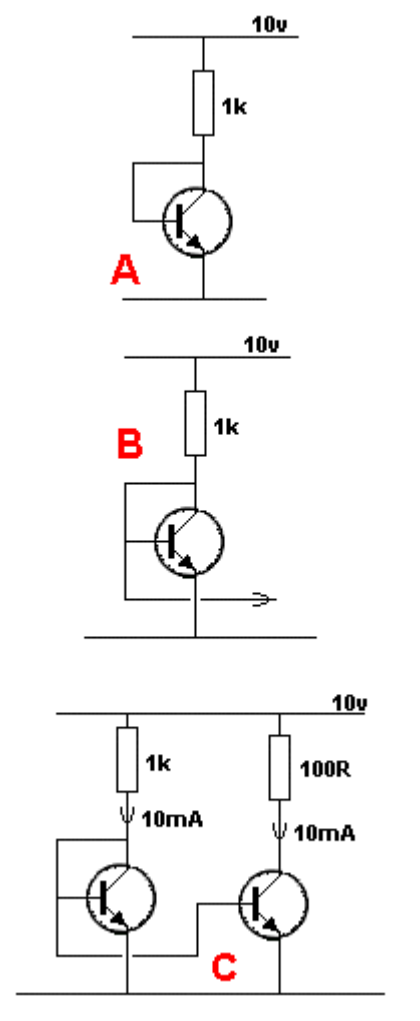

Fig 71bac Current Mirror Circuit

This is not a constant current circuit. It is a **CURRENT SOURCE** circuit. A **constant current** circuit means the current will not change if the supply voltage is increased or decreased. This circuit simply supplies a DC signal (in the form of a voltage) to another circuit so that the current in the original circuit is available in the second circuit and this is called a **current mirror** arrangement.
We start with diagram **A**.
The transistor is turned on because the base is connected to the collector. The collector can only rise to about 0.7v because it is connected to the base so that most of the supply-voltage appears across the load. This means the current through the load is known.
It can be determined by Ohm's Law: I =V/R.
Here's how the circuit works: When the circuit is turned ON, current flows through the resistor and through the base-emitter junction. This turns the transistor ON very hard and the current through the collector-emitter circuit increases. This reduces the voltage on the collector and as it decreases, the voltage on the base decreases and the transistor starts to turn OFF. In the end, the transistor is turned on to allow 10mA to flow through the collector-emitter junction due to the 10v supply and 1k resistor.
Suppose we instantly change the 1k for 100 ohms.
The transistor is only lightly turned ON and current though the collector-emitter is only 10mA. But the 100R will deliver 100mA and the extra current will flow into the base and turn the transistor ON harder. This will increase the current thorough the collector-emitter junction and rob the base of the extra current, however the current into the base will be higher than before because the transistor has to be turned on more to allow about 100mA to flow through the collector-emitter junction.
If we take a lead from the base of the transistor, as shown in fig **B** we can connect it to the base of an identical transistor and the second transistor will allow the same current to flow though the collector-emitter junction.
The result is circuit **C**. The current through the 100R resistor will be 10mA (normally it would be 100mA). The second transistor is only lightly turned on and allows 10mA to flow.

ADJUSTABLE CURRENT POWER SUPPLY

A reader requested a circuit for an **Adjustable-Current 5v Power Supply**.
In other words he wanted a power supply with **CURRENT LIMITING**.
This type of power supply is very handy so you can test an unknown circuit and prevent it being damaged.

For this design we will make the current adjustable from 100mA to 1 amp.
This circuit can be added to any power supply with an output of more than 7v. Our circuit requires at least two volts "head-room" for the voltage across the regulating transistor (the transistor that delivers the voltage and current) and about 0.5v for the current-detecting resistor.
The maximum current is set by the 100R pot and
This circuit delivers 5v when no current is flowing and the voltage gradually reduces. When the set value of current as selected by the 100R pot is reached the output voltage will have dropped by 0.6v. This is the voltage developed across the current-sensing resistor and this voltage is detected by the BC547 to to start to reduce the output voltage. As soon as the maximum current is reached, the voltage falls at a faster rate and if the output is short-circuited, the current-flow will be as set by the pot.

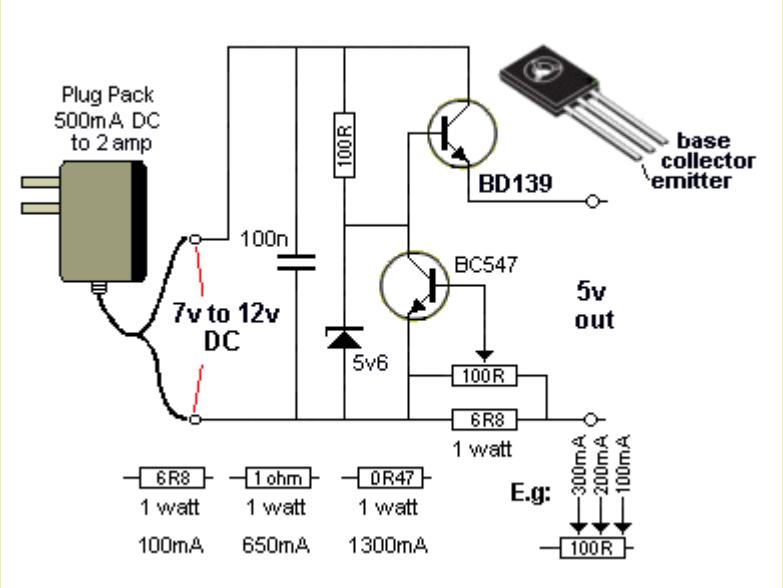

ADJUSTABLE CURRENT POWER SUPPLY

The output voltage of this power supply can be increased by changing the voltage of the zener diode. The voltage of the plug pack must be at least 3v above the output voltage to allow the regulator transistor and current-detector resistor to function.

CONSTANT CURRENT

As soon as the load reaches the point where it takes the full current, the circuit turns into a **CONSTANT CURRENT** power supply.

VOLTAGE REGULATOR

Before we go to the **2-transistor Voltage Regulator**, we will explain how a voltage regulator works.
The basis of all voltage regulators is a diode.
A diode has a voltage characteristic. When a voltage is placed across its terminals, and the voltage starts at zero, no current flows through the diode until the voltage reaches 0.65v. As soon as it reaches 0.65v, current flows and as you increase the voltage, more current flows but the voltage across the diode remains at 0.65v. If the voltage is increased further, the current increases enormously and the diode will be destroyed.
This characteristic does not apply to a resistor. The voltage across a resistor will increase when the supply voltage increases and thus a resistor cannot be used as a Voltage Regulator.
We have selected 0.65v for this discussion as this is the characteristic voltage-drop for a normal silicon diode.
However germanium diodes and Schottky diodes have different characteristic voltage drops. On top of this, special diodes can be produced with higher voltages. These are called **ZENER DIODES**.
They all have the same characteristic. As soon as the specified voltage appears across the terminals of the diode, current starts to flow and if the voltage is increased too much, the diode will be damaged.
To prevent this, a resistor must be placed in series with the diode.
This is the basis of all voltage regulators.

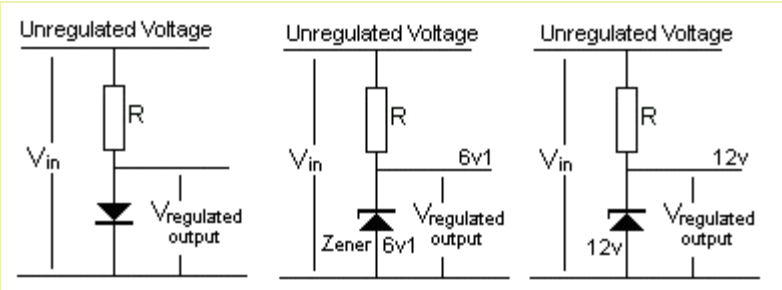

Fig 71be The Unregulated Voltage is regulated by the diode (zener)

In **Fig 71be**, the supply voltage is called the **UNREGULATED VOLTAGE** and it is connected to resistor R and a diode. The voltage at the top of the diode is called the **REGULATED VOLTAGE**.
The diode produces a fixed 0.65v and the zener produces a fixed 6v1 or 12v.
This circuit is called a **SHUNT REGULATOR** because the regulator is shunted (placed across) the load. [A Shunt is a load - generally a low-value resistor - placed across a component in a circuit to take a high current to either protect the other components or to test the circuit under high-current conditions.]
That's exactly what the diode or zener diode does.
It takes ALL THE CURRENT from the unregulated supply and and feeds it to the 0v rail. During this condition the circuit is 100% wasteful. All the wattage is being lost in heating resistor R and heating the diode.
The circuit is providing a fixed voltage at the top of the zener.
When a load is added to the circuit, it takes (or draws) current and this current comes from the current flowing though the zener.
The load-current can increase to a point where it takes nearly all the current from the zener.
If it takes more current than the zener, two things happen. Current stops flowing though the zener and the voltage on the top of the zener drops to a lower value. This is the point where the zener has **dropped out of regulation** and the circuit is no longer regulating.
In other words: A current is flowing into the regulator circuit and it is being divided into two paths: The zener path and the load path. The load path cannot be more than 95% or the regulator will drop out of regulation (the output voltage goes below the zener voltage).
Here's how the diode (or the zener) works: The zener is just like a bucket with a large hole in the side. As you fill the bucket, the water (the voltage) rises until it reaches the hole. It then flows out the hole (through the zener) and does not rise any further. When you draw current from the circuit it is the same as a tap at the bottom of the bucket and the water flows out the tap and not the hole. The pressure out the tap is the voltage of the zener.
The only disadvantage of this circuit is the voltage across the zener changes a small amount when the current through it changes.
The **SHUNT REGULATOR** is limited to small currents due to the fact that the load is taking the current from the zener.
The current can be increased by adding a buffer transistor to produce a **BUFFERED SHUNT REGULATOR** as shown in **Fig 71bf.** This circuit actually becomes a PASS TRANSISTOR arrangement.

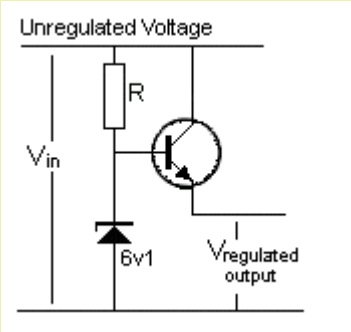

Fig 71bf Buffered Shunt Regulator
called a PASS TRANSISTOR Regulator
with the transistor in an emitter-follower configuration

The transistor operates as an **amplifier** and if the DC gain of the transistor is 100, the output current of a Buffered Shunt Regulator can be 100 times more than a Shunt regulator.
See more circuits on the **Zener Regulator** and the **Transistor Shunt Regulator** and **Pass Transistor Regulator** in 101-200 Transistor Circuits. A very clever circuit to reduce ripple is called the **Electronic Filter**.

PASS TRANSISTOR

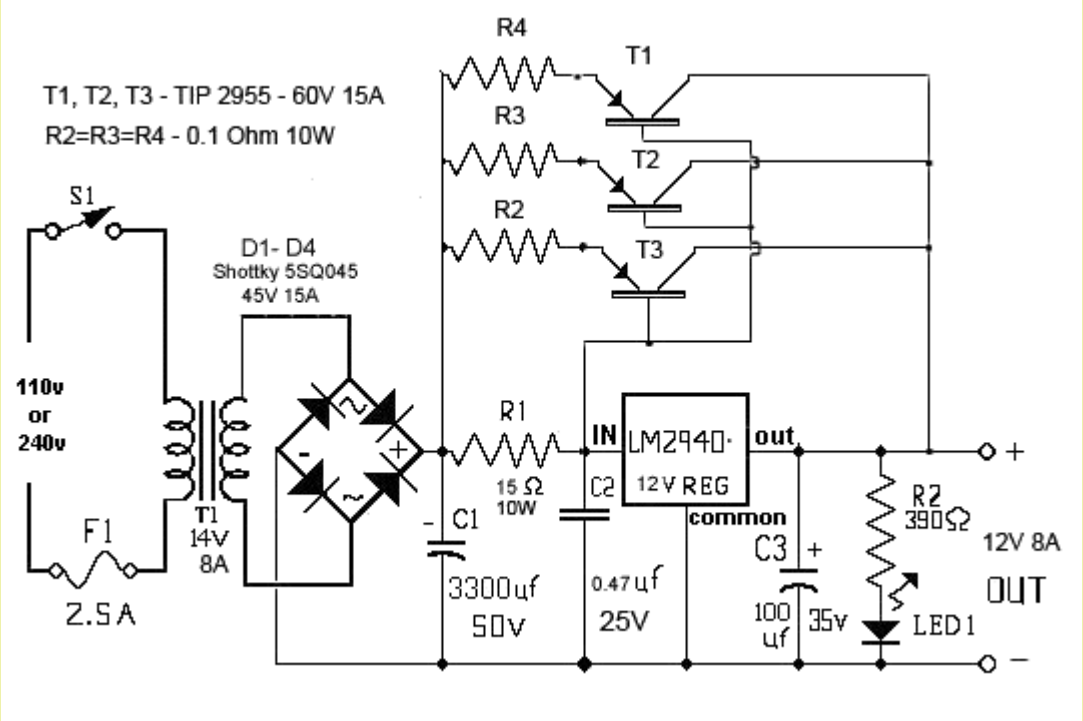

The 3 PNP transistors in the Power Supply circuit above are called PASS TRANSISTORS, because they pass or CONDUCT the current. They pass the current from the bridge to the output.
These transistors are AMPLIFIERS - CURRENT AMPLIFIERS - as they amplify the current entering the base and deliver a higher current through the emitter-collector terminals.
To see how these transistors work, we will simplify the circuit:

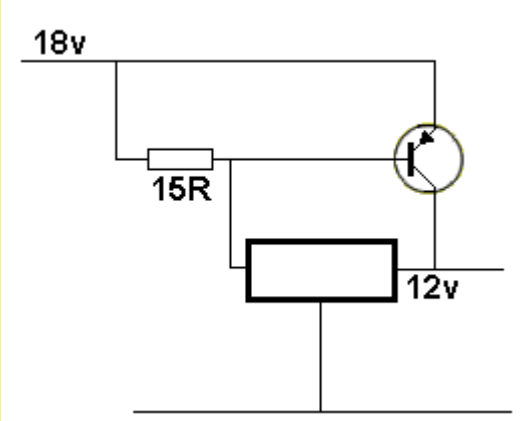

Only 3 components are involved in the explanation, the transistor, the base resistor and the rectangle containing the voltage regulator IC.
The 3 emitter resistors are only needed to make sure each power transistor delivers the same current.
It is called CURRENT SHARING.
The IN voltage is about 18v and the voltage OUT is fixed at 12v by the 3-terminal regulator.
The regulator produces the 12v OUT. The transistor does not have any control over the output voltage.
At the moment there is NO LOAD. The transistor is not turned on AT ALL and the output voltage is produced by the regulator. The regulator takes about 10mA to provide this condition.
Now put a LOAD on the output.
This load creates a voltage drop across the 15R and as soon as it is more than 0.6v, the transistor starts to turn ON.
As the load increase (the resistance of the load decreases) by say adding more globes, the current increases and the voltage-drop across R increases and this turns the transistor ON more.
The 3-terminal regulator (in the rectangle) delivers almost no current to the load during any of these conditions (only about 50mA !!). It is the transistor that delivers all the current.
The current PASSES through the transistor and that's why it is called a PASS TRANSISTOR.

The purpose of the 15R resistor is SOLELY to allow the transistor(s) to turn ON.
As the load takes more current, the transistor will be "asked" for this current, but it does not deliver. So, the regulator delivers the extra current and this current flows through the emitter-base junction. The 15R is added so that some of the current flows through the resistor.
The extra current requested by the regulator flows through the emitter-base junction of the PNP transistor and turns it ON more. This allows the transistor(s) to pass the current from the bridge to the output. The current taken by the 3-terminal regulator mainly flows through the emitter-base junction.

I don't know why the 15R is rated at 10 watts. The voltage across this resistor cannot rise to more than 1v and this means the resistor can only pass 1/15 amp = 60mA !!
Obviously the circuit has never been tested.

0000000000000000000000000000000

The whole concept of a regulator (removing the ripple while maintaining the required voltage) revolves around the voltage-drop across a diode and in **Fig 71bb**, the diode is replaced with the voltage-drop across the base-emitter junction of a transistor. This voltage-drop is fairly constant when a small current flows and this is the basis of the **Two Transistor Regulator:**

TWO TRANSISTOR REGULATOR

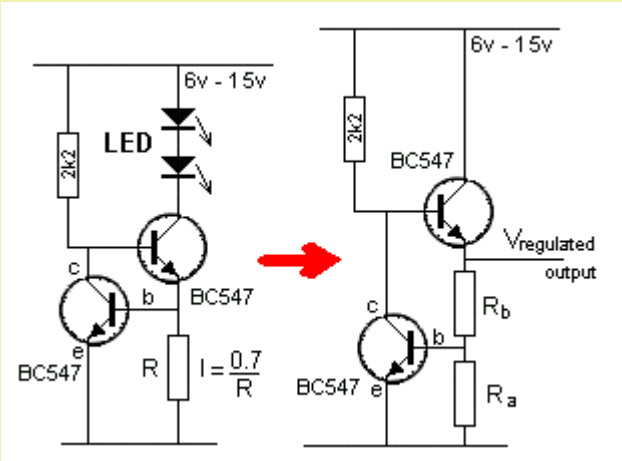

Fig 71bb

If we take the Constant-Current Circuit shown in **Fig 71b** above, and split resistor **R** into **R**a and **R**b, we produce an identical circuit with a completely different name. It is called a **TWO TRANSISTOR REGULATOR**.
The circuit will produce a smooth voltage on the output, even though the rail voltage fluctuates AND even if the current required by the output increases and decreases.
That's why it is called a REGULATOR CIRCUIT.
The current through Ra and Rb is "wasted current" so it does not have to be more than 1mA - enough to turn on the lower NPN transistor.
Ra and Rb form a voltage divider and when the join of the two resistor reaches 0.7v, the lower transistor turns ON.

The lower transistor forms a voltage-divider with the 2k2 to pull the top BC547 transistor DOWN so the voltage on the output is kept at the "design voltage" (the top transistor is an emitter follower). If the device connected to the output requires more current, the top transistor will not be able to provide it and the output voltage will drop. This will reduce the voltage on the base of the lower transistor and it will turn OFF slightly.
The voltage on the base of the top transistor will rise and since this transistor is an emitter-follower, the emitter will rise too and increase the output voltage to the original "design value."
Regulation is also maintained if the supply decreases (or increases).
If the supply decreases, the voltage on the base of the top transistor will fall and the output voltage will also fall.
The voltage on the base of the lower transistor will also fall and it will turn off slightly.
This will increase the voltage on the base of the top transistor and Vregulated will rise to the design value. Both the supply and the load can change at the same time and the circuit will compensate.
All we have to do is re-draw the circuit as a standard 2-Transistor Regulator as shown in **Fig 71bc** and you have covered the principle of its operation.

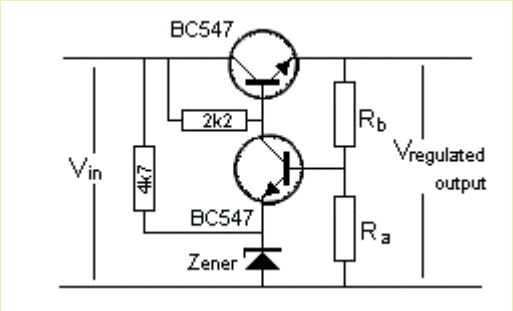

Fig 71bc
2-Transistor Voltage Regulator

THE TRANSISTOR AS AN AF AND RF DETECTOR

A transistor can be used as a "detector" in a radio circuit. The Detector stage in a radio (such as an AM receiver), is usually a crystal, but can be the base-emitter junction of a transistor.
It detects the slowly rising and falling audio component of an RF signal. This signal is further amplified and delivered to a speaker. A single transistor will perform both "detection" and amplification.
In **Fig 71bd**, the first transistor provides these two functions and the output is passed to the second transistor via direct-coupling.
The first two transistors provide enormous gain and a very high input impedance for the tuned circuit made up of the 60t aerial coil and 415p tuning capacitor. The signal generated in the "tuned circuit" is prevented from "disappearing out the left end" by the presence of the 10n capacitor as it holds the left end rigid.

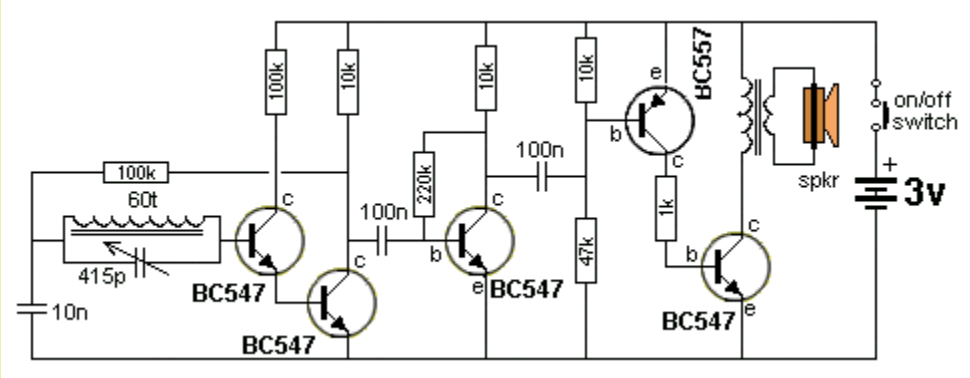

Fig 71bd 5-TRANSISTOR RADIO

THE COUPLING CAPACITOR

We have shown the coupling capacitor transfers very little energy when it does not get fully discharged during part of the cycle and this means it cannot receive a lot of energy to charge it during the "charging" part of the cycle.
This is a point that has never been discussed in any text books. It is the energy (actually the current - due to the difference in voltage between the two terminals of the capacitor) that flows into the capacitor that creates the flow of energy from one stage to the other. It is the "magnet on the door" analogy described previously.
But the question is:
1. How much energy will a capacitor pass under ideal conditions?
2. How do you work out if a capacitor needs to be: 100n, 1u, 10u or 100u?

Without going into any mathematics, we will explain how to select a capacitor.
Many text books talk about the capacitive reactance of a capacitor. This is its "resistance" at a particular frequency.
But an audio circuit has a wide range of frequencies and the lowest frequency is generally selected as the capacitor will have the highest resistance at the lowest frequency.
We will select 200Hz as the lowest frequency for an amplifier.

A 100n will have a "resistance" of about 10k at 200Hz

A 1u will have a "resistance" of about 1k at 200Hz
A 10u will have a "resistance" of about 100R at 200Hz
A 100u will have a "resistance" of about 10R at 200Hz

A 100n capacitor at 200Hz is like putting a 10k resistor between one stage and the next.

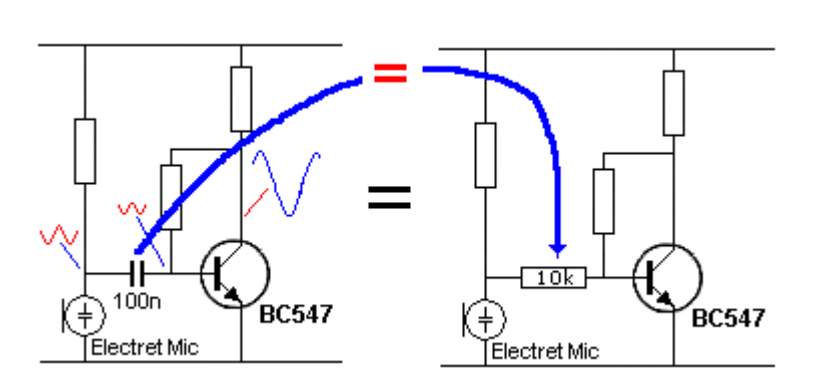

Fig 71c

A 1u capacitor at 200Hz is like putting a 1k resistor between one stage and the next.

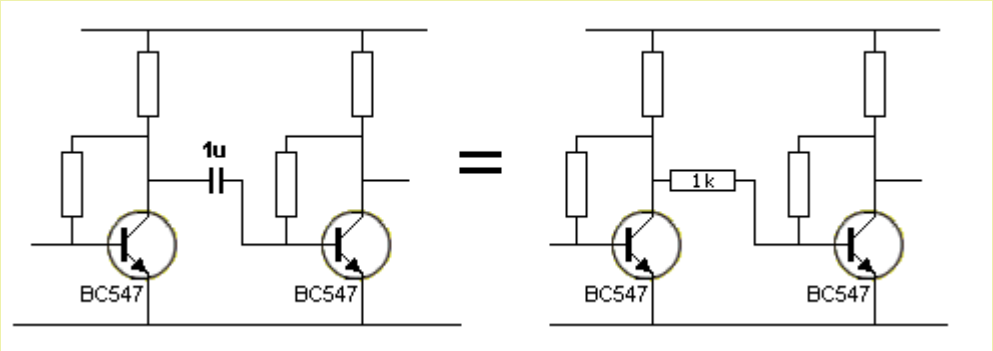

Fig 71d

A 10u capacitor at 200Hz is like putting a 100R resistor between one stage and the next and a 100u capacitor at 200Hz is like putting a 10R resistor between one stage and the next.
In other words, the resistor transfers approximately the same amount of energy as the capacitor but the capacitor separates the DC voltages - the capacitor allows the naturally-occurring voltages to be maintained.

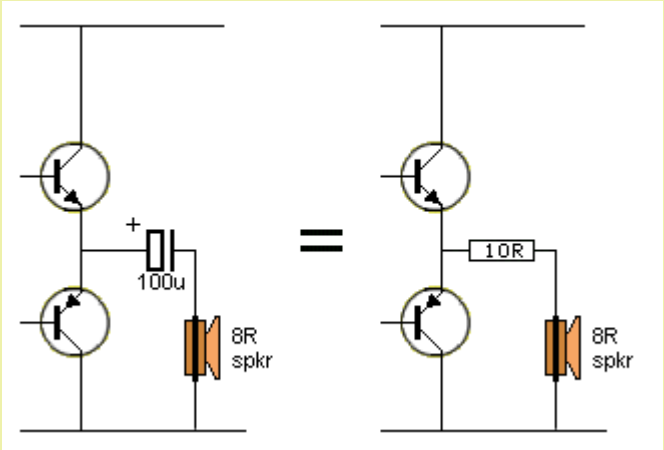

Fig 71e

The capacitive reactance of the 100u ranges from 10R to less than 1R (depending on the frequency being processed).

In **Fig 71d** you can see the "resistance" of a capacitor is very small compared to the LOAD resistance (the main component that determines the amount of energy that can be transferred from one stage to another and the impedance of the receiving stage - the component that determines the discharging of the capacitor). The "resistance" of a capacitor decreases as the frequency increases. Thus the "capacitive reactance" of a capacitor has very little effect on the transfer of energy from one stage to the next (when it is correctly selected). The major problem is not discharging the capacitor. It only transfers the maximum amount of energy when it is completely discharged.
When it is completely discharged, it acts like a "zero-ohm" resistor during its initial charging-cycle. This is called **INRUSH CURRENT** and can be ENORMOUS. This is the "plop" you hear from some amplifiers when they are turned ON. It is also the inrush current to a power supply. To reduce this enormous in-rush current, a small-value resistor is included in series with the input of the electrolytic(s) in the circuit (or power supply).

Let's go over this again:
The transfer of energy from one stage to another depends on 3 things:
1. The value of the LOAD resistor of the first stage. This resistor charges the capacitor. Its resistance should be as **low as possible** to transfer the maximum energy.
2. The value of the capacitor. It should be **as high as possible** to transfer the maximum energy.
3. The value of the input impedance of the receiving stage. It should be **as low as possible** to discharge the capacitor.

Let's take a 100n capacitor:
In the following circuit, a 100n capacitor separates an electret microphone from the input of a common-emitter stage.

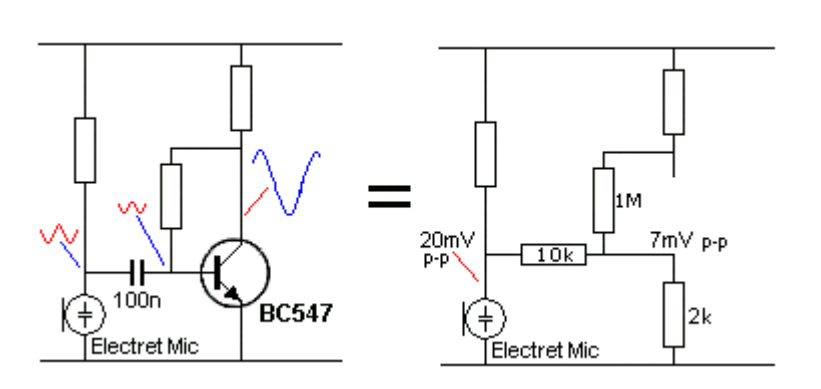

Fig 71f

The waveform on the output of the electret microphone is 20mV p-p (peak-to-peak). This amplitude passes through the 100n capacitor, which we have drawn as a 10k resistor, (to represent the capacitive reactance of the capacitor at 200Hz). The input impedance of the common-emitter amplifier is about 500 ohms to 2k. (500 ohms when the base current is a maximum and 2k when the base current is very small).
The capacitor and the input impedance form a simple voltage-divider, as shown in **Fig 71f.** When a 20mV signal appears on the input of the voltage divider, the voltage at the join of the two resistors will be about 3.3mV.
This is 3.3mV ON TOP of the 630mV provided by the 1M base-bias resistor.
This means about 16% of the waveform gets transferred to the base of the transistor. A common-emitter stage will have a gain of about 70, so 3.3mV input will create 230mV output. It's called a "swing" of 230mV or 230mV P-P (peak-to-Peak) or 230mV AC signal.
But most signals have a frequency of about 2kHz and the capacitive reactance of the capacitor will be about 1k. In this case the transfer will be 66% or 13mV and the output of the stage will be nearly 1v.
This is an ideal situation where the capacitor is being fully discharged.
The actual transfer of energy from one stage to another is much more complex than we have described, however you can see it involves the LOAD resistor, the size of the capacitor and the efficiency of discharging the capacitor.
The only way to see the actual result is to view the waveforms on a CRO (Cathode ray Oscilloscope).

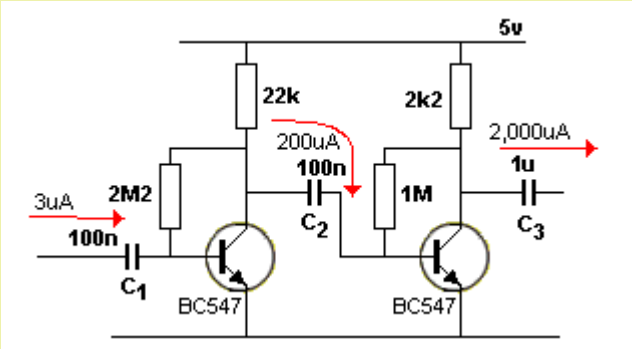

TRANSFER OF ENERGY THROUGH THE COUPLING CAPACITOR

It is very difficult to work out how much energy will be transferred by the capacitor coupling the two stages in the circuit above.
As we have mentioned before, the transistor does not transfer very much energy. The first transistor merely pulls the capacitor "down" and this turns OFF the second transistor and discharges the capacitor. But the discharge path is through the base emitter junction of the second transistor and when the base of the second transistor drops below 0.55v, the junction exhibits a very high resistance and does not discharge the capacitor. The base needs to go about 6v negative to exhibit reverse-bias and the 5v circuit does not allow this to occur. So, some slight discharge is done via the 1M resistor. The only other discharge is done when the capacitor is being pulled down and it is still feeding energy into the base of the second transistor.
This loss of energy is not very much and when the capacitor charges again, ONLY the pervious losses can be added to the capacitor and thus it transfers very little energy on the second and future cycles of its operation.
The secret to transferring a lot of energy is to get the capacitor discharged fully during part of the cycle.
The 200uA in the circuit above is only a theoretical value for the first cycle, when the capacitor is completely discharged. The second cycle will transfer much LEES than this.

The coupling capacitor passes CURRENT not VOLTAGE

The next point is this: The coupling capacitor does not pass VOLTAGE from one stage to the next but CURRENT.
The voltage on the base of the second transistor may be 0.55v when the capacitor is not passing any energy and rise to 0.65v when passing the maximum energy. This may be equivalent to a 3v signal.
The resistance of the LOAD resistor in the first stage determines how much current will delivered to the capacitor to charge it. In other words, the capacitor converts the voltage (the amplitude of the signal) to CURRENT and the second transistor converts the current to a voltage across its LOAD resistor.
But the energy passed by the capacitor depends on how much it is discharged, as this is the energy (called the charging energy) that will be transferred. There is no way to determine how much energy is discharged on each cycle.
Everyone looks at how much energy (or charge, or current) the capacitor will pass during the "active" part of the cycle or the "forward" part of the cycle, but the most important part of the cycle is the DISCHARGING of the capacitor and when the base of the transistor falls below 0.5v, the capacitor is NOT discharged via the base. This means you have to look-at what is discharging the capacitor. This is the main reason why a particular stage is not amplifying. A diode between base and 0v rail will become forward-biased when the voltage drops below 0v and this can be used to discharge the capacitor.
Now you can see why mathematical calculations in Lecture Notes are SO INACCURATE. Everything is completely different to what you have been told.

INPUT AND OUTPUT IMPEDANCE

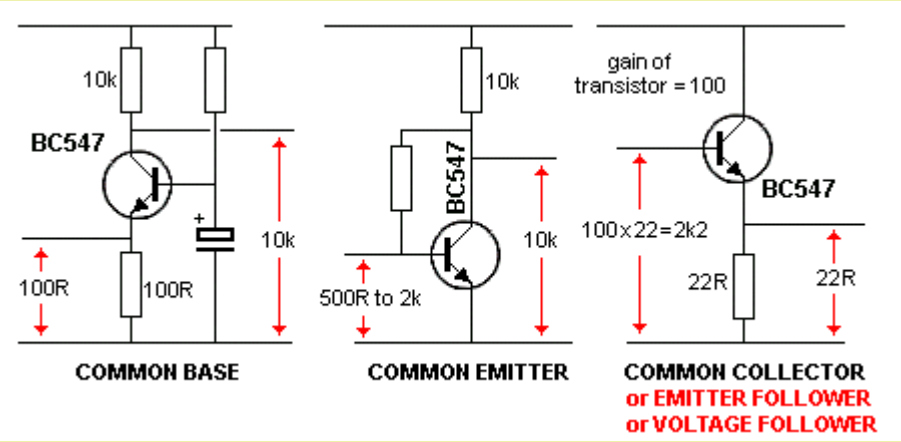

Fig 71g

Fig 71g shows each transistor stage has an input and output impedance. This really means an input and output resistance, but because we cannot measure the value with a multimeter, we have to find the value of resistance by measuring other things such as "waveform amplitudes" and then create a value of resistance, we call IMPEDANCE. The values shown are only approximate and apply to transistors called SMALL SIGNAL DEVICES. The values are really just a comparison to show how the different stages "appear" to input and output devices, such as when connecting stages together.
The input impedance of a common-emitter stage ranges from 500R to 2k. This variation depends on the type of transistor and how much the stage is being turned ON. In other words, the amount of current entering the base.
The value of 2k2 for the emitter-follower depends on the current entering the base.
These values are all approximate and are just to give an idea of how to describe the various values of impedance.

INPUT IMPEDANCE

There are so many discussions in text books on the INPUT IMPEDANCE of a transistor and they are all complex and confusing for the beginner.
Here is a simple explanation.
The transistor is like a FORK-LIFT TRUCK. You move the lever UP and the fork lifts a pallet of bricks.
The same with a transistor, you deliver a small current into the base and the collector delivers a higher current at the collector terminal. This higher current passes through a load (such as a resistor) placed between the collector and the positive rail.
But a transistor can only amplify the current about 100 times. A fork-lift truck can amplify the lever about 10,000 times.
So, don't worry about terms such as IMPEDANCE. All you have to remember is this: The transistor will amplify the current delivered to the base, about 100 times.
Of course you also have to know how much current is being delivered to the base from a previous stage, but that is a problem for another time.
When you place two transistors "on top of each other" to produce a "transistor" called a super-alpha transistor or DARLINGTON transistor, the first transistor amplifies the current by 100 and the second amplifies this current another 100 times, making a total of 100 x 100 = 10,000 and it is as strong as a fork-lift truck !!
Because the first transistor is helping the second transistor, we also say the input impedance is increased by a factor of 100.
But it really all boils down to the fact that the current capability is INCREASED.
There are other facts such as voltage, and amplification will decrease as the current increases, but you can study this AFTER you realise the transistor is simply INCREASES THE CURRENT.

THE TIME DELAY

Also called the TRANSISTOR TIME DELAY or **TIME CONSTANT** or **RC Delay Circuit** or **TIMING CIRCUIT.**
A Delay Circuit is made with a capacitor and resistor in series:

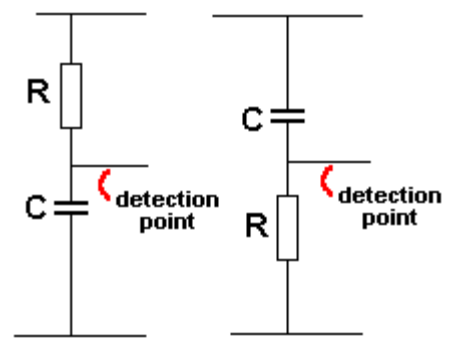

The TIME DELAY circuit

These are the two components that create the **TIME DELAY**. No other parts are needed. When the value of the capacitor and resistor are multiplied together the result is called the **TIME CONSTANT** and when the capacitor value is in FARADS and resistor in OHMs, the result is SECONDS
To detect when the capacitor has reached about 63% of its final voltage, we need some form of detecting device, such as a transistor.
But the detecting device cannot "steal" any of the current entering the capacitor, otherwise the voltage on the capacitor will never increase or take longer to increase.
We know a transistor requires current for it to operate but a Darlington Pair (or Darlington) requires very little current, so the detecting device must be something like a Darlington.
The transistor plays no part in the timing (or TIME DELAY) of the circuit. It is just a detector.

The main secret behind a good TIME DELAY circuit is to allow the capacitor to charge to a high voltage and use a large timing resistor. This reduces the size of the capacitor (electrolytic) and produces a long time delay.
There are lots of chips (Integrated Circuit) especially made for timing operations (time delays).
Transistors (of the "normal" type - called Bipolar Junction) are not suited for long time delays.
Field Effect Transistors, Programmable Uni Junction transistors and some other types are more suited.
However a normal transistor can be used, as shown in **Fig 71h**.
The normal detection-point is 63% but you can make the circuit "trigger" at any voltage-level. The value "63%" has been chosen because the voltage on the capacitor is increasing very little (each second) when it is nearly fully charged and waiting for it to reach 65% may take many seconds. Trying to detect an extra 10% or 25% is very hard to do and since it takes a long time for the voltage to rise, the circuit becomes very unreliable and very inaccurate. That's why 63% has been chosen.
See also Integration and Differentiation. The same two components (a resistor and capacitor) can be used for a completely different purpose. That's the intrigue of electronics.

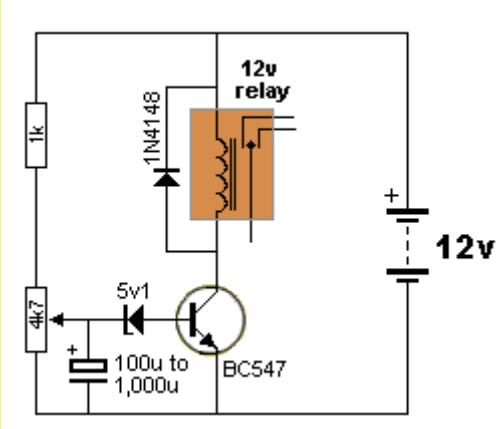

Fig 71h

Fig 71h shows a **TIME DELAY** circuit. This circuit does not wait for the capacitor to charge to 63% but it detects a voltage of 5v1 + 0.7v = 5v8.
The detecting circuit is made up of the 5v1 zener and base-emitter junction of the transistor.
These two components create a high impedance until a voltage of 5v8 because the zener takes no current until its "characteristic voltage" has been reached.

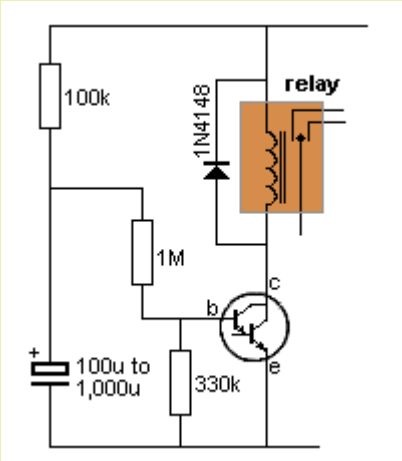

Fig 71j

Fig 71j shows a Time Delay Circuit. The 100k is the time delay resistor. The 1M is the "sense resistor" and the the 330k is the voltage divider resistor.
The base of the Darlington transistor detects 1.4v and the 1M/330k produces a voltage divider that requires 3 x 1.4v = 4.2v on the electrolytic. The 1M, 330k and transistor provide a fairly high impedance detecting circuit that does not inhibit the charging of the capacitor.
The circuit requires a supply of 12v.

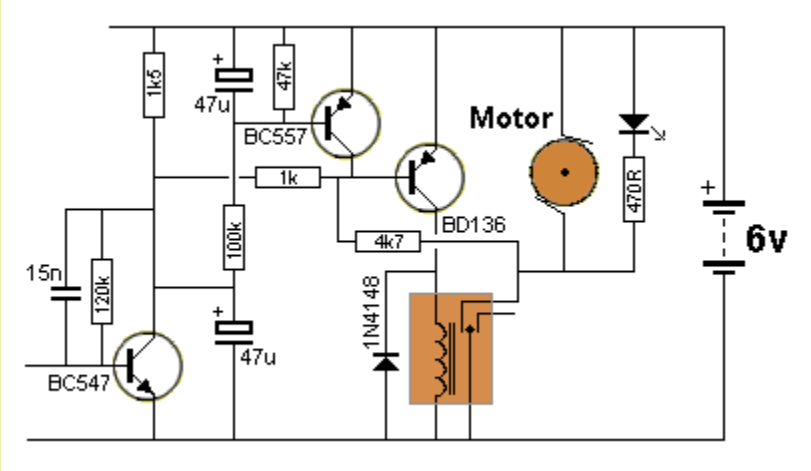

Fig 71k

Fig 71k shows two **Time Delay Circuits** as well as a latching circuit (the 4k7 resistor), a buffer transistor (BD136) and a high frequency filter (the 15n capacitor).
When the circuit is turned **ON**, the relay is not energised. The signal on the base of the first transistor has any high frequency component removed by the 15n capacitor (see below for the effect of a filter on a signal).
The lower 47u is fully charged via the 1k5 a very short time after the circuit is turned on and the output of the first transistor discharges this electrolytic very quickly when it receives a signal.
This turns **ON** the BD136 transistor via the 1k resistor and the relay is energised.
The output of the relay is connected to a 4k7 resistor and this resistor takes over from the effect of the first transistor to keep the relay activated.
If the input signal continues, the top 47u starts to charge and after about 2 seconds, the BC557 transistor turns **ON** and removes the emitter-base voltage on the BD136. This turns the relay **OFF**.

BACK EMF

In some circuits using a relay, you will find a diode has been placed across the coil.
When the relay is turned OFF, it produces a voltage in the opposite direction that can be much higher than the voltage of the supply. This means the voltage appearing on the collector will be higher than some transistors can withstand and they will either zener and absorb the energy or be damaged due to the excess voltage. The diode across the coil is connected so the voltage flows through it and the transistor is protected.
This voltage is called BACK EMF and only occurs when the relay is turned off suddenly when full current (or near full current) is flowing.
The size of the back EMF is due to the number of turns on the coil and the metal in the (magnetic) core. It can be 10 times or even more than the supply voltage and the diode will reduce this to about 0.7v.
Figs 71h,j and k above show a diode across a relay to remove the back EMF and protect the transistor.

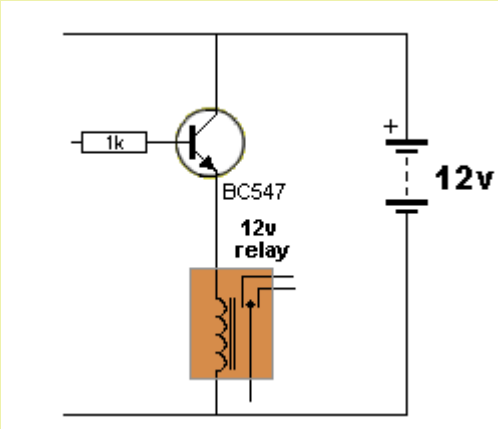

Fig 71m

Figs 71m shows a relay connected in the emitter of a transistor. This configuration is called an emitter-follower. When the transistor turns off, the relay is de-energised and a back-voltage is produced.
The voltage on the top of the relay becomes less than 0v and this pulls the emitter DOWN. This has the effect of turning ON the transistor and for a tiny fraction of a second, the effect of the relay is cancelled by a flow of current through the transistor. This prevents a high back-voltage being produced and thus a diode is not needed.

One point about emitter-follower designs:
The voltage on the relay is less than 12v due to the 0.7v between the base and emitter and the base will be lower than 12v by as much as 1v. Compare this with the common-emitter driver where the collector-emitter drop will be as low as 0.4v.

Back EMF is also produced by motors and is known as "commutation noise." This "noise" can also be suppressed via a capacitor and/or small inductors in the leads. The size of the voltage must be measured when the circuit is operating as it is a "spike" and this spike will puncture a semiconductor (such as a transistor).
Back EMF is also produced by coils, called INDUCTORS. An inductor is also called a choke.
When a piezo is placed across an inductor, and a signal is delivered to the parallel-pair, the piezo will detect the high-voltage (Back EMF) and produce a very load output. The inductor produces the high voltage when the signal is turned off sharply. The magnetic flux collapses and produces a very high reverse voltage. A typical circuit that takes advantage of this high voltage is the: Wailing Siren

HIGH FREQUENCY "NOISE"

Before we move on to the next phase of this discussion, there is one interesting point that needs covering.
When a circuit has a number of amplifying stages, there is always a possibility of noise being generated in one of the transistors in the "front-end" (the first or second stage in the amplifier) and this is amplified by the stages that follow. This is the case with the Hearing Aid Amplifier in **Fig 69**.

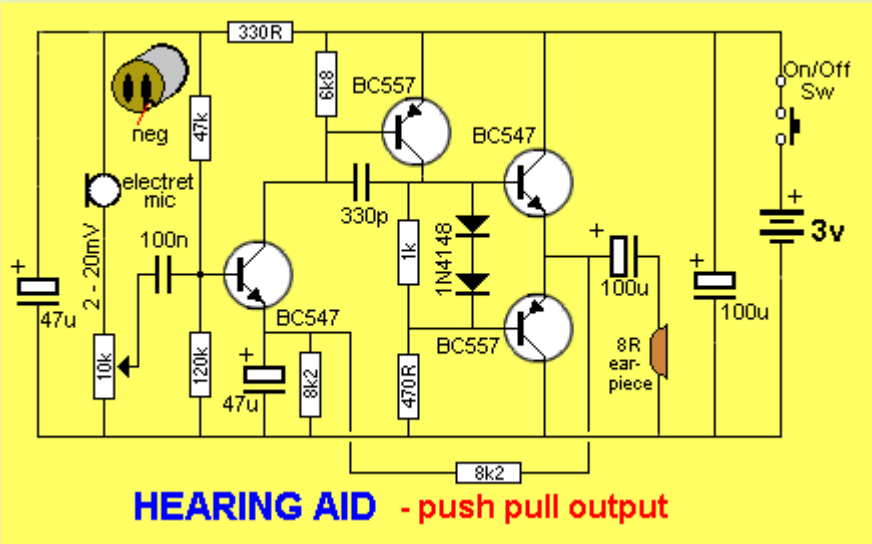

Fig 69.

The 330p between the base and collector of the BC557 removes high-frequency noise. If the 330p is removed a 1MHz waveform is generated in the front-end and amplified by the stages that follow. This noise cannot be heard but is visible on a CRO (Cathode Ray Oscilloscope) and causes the circuit to take extra current. The 330p capacitor provides **NEGATIVE FEEDBACK** to remove the waveform completely.

FILTERS

We have studied circuits that use components to produce NEGATIVE FEEDBACK. The first circuit we studied was the self-biased common-emitter stage. The base-bias resistor provided negative feedback to set the voltage on the collector.
Any component (resistor or capacitor) connected between the output and input of a stage produces NEGATIVE FEEDBACK.
A **resistor** connected between the output and input produces about the same amount of feedback no matter what frequency is being process by the amplifier.
But a **capacitor** provides more feedback as the frequency increases. That's because the effective

"resistance" of the capacitor decreases as the frequency increases.
This feature can be used to "kill" the amplitude of high frequencies and thus only allow low frequencies to be amplified.
It can also be used to only allow high frequencies to be amplified. When it is used to couple two stages, a **low-value** capacitor will only allow high frequencies to pass from one stage to the next.
By using a resistor in series with a capacitor, the effect of the capacitor can be controlled.
Using these facts, we can design circuits that will amplify low frequencies or high frequencies. This type of circuit is called a FILTER.
A Filter can be given a number of names. Here are a few:
Active Filter contains a transistor or op-amp in the circuit
High Pass Filter suppresses or rejects the low frequencies Only the high frequencies appear on the output
Low Pass Filter suppresses or rejects the high frequencies Only the low frequencies appear on the output
Notch Filter: A Filter that rejects or suppresses a narrow band of frequencies.

To understand how a filter works, you need to know "**HOW A CAPACITOR WORKS**."

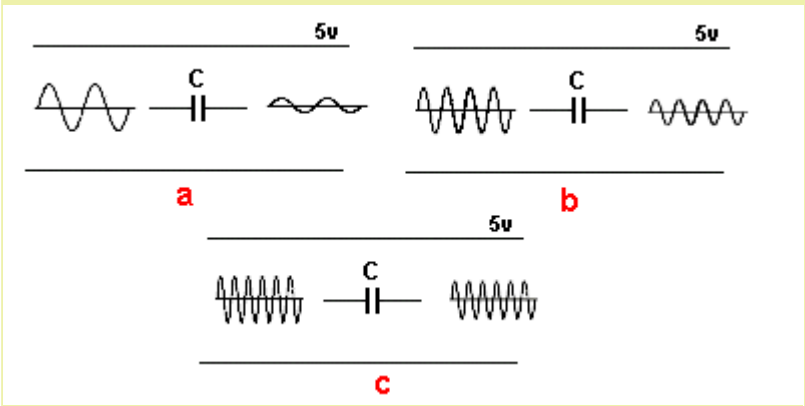

Fig 72a.

Fig 72a shows a capacitor with a low-frequency signal entering the left terminal.
The output amplitude from the capacitor in diag a will be small because the capacitor is able to charge and discharge as the signal rises and falls.
As the frequency of the signal increases, the output increase in amplitude because the capacitor does not have enough time to charge and discharge and thus it does not "absorb" the amplitude of the signal.

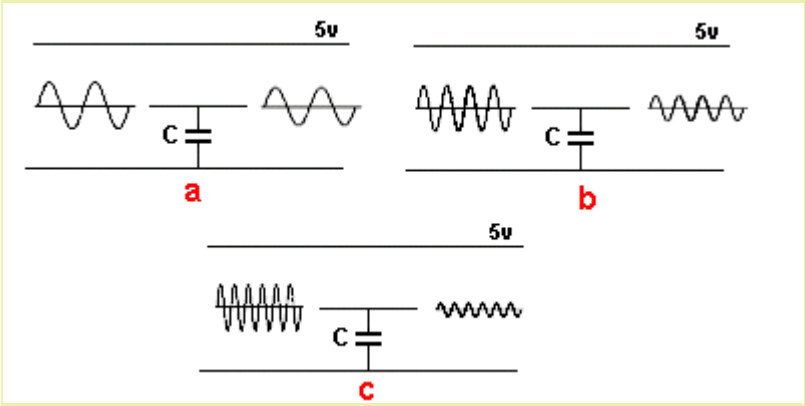

Fig 72b.

Fig 72b shows a capacitor connected between the "signal line" and 0v rail. When a low-frequency signal is on the "line," the capacitor has little effect on attenuating (reducing) the amplitude, as shown in diag a because the capacitor charges and discharges just like pushing a "shock absorber" up and down **slowly**.
As the frequency of the signal increases, it is reduced in amplitude because the signal is trying to charge and discharge the capacitor very quickly and it takes **energy** to do this and the energy is coming from the signal.

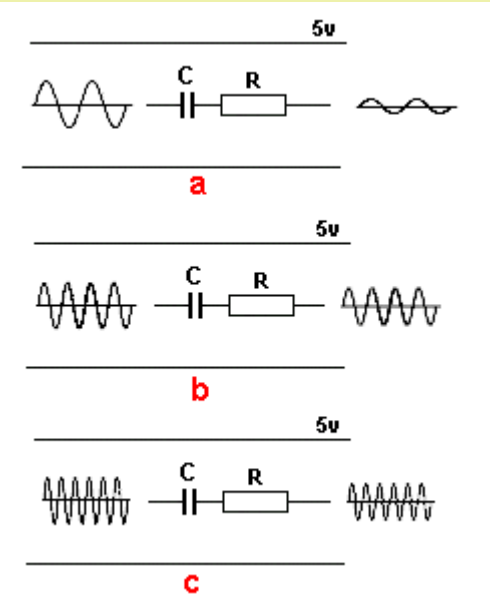

Fig 72c.

Fig 72c **Fig a** shows a capacitor and resistor connected in series on the "signal line." With a low-frequency signal, the capacitor reduces the amplitude because most of the signal is absorbed by the capacitor charging and discharging.
As the frequency increases (**fig b**), the output will be reduced by a smaller amount because the capacitor has less time to charge and discharge and less time to "absorb" the signal.
As the frequency is increased further **(fig c)**, the resistor starts to have an effect on reducing the amplitude because these two components are connected to other components in a circuit and a higher frequency has a higher energy and more of this energy gets lost in the resistor - thus reducing the amplitude slightly.
In addition, the capacitor is already charging and discharging as quickly as possible and it is transferring as much of the signal as possible. It is only the resistor that is creating the attenuation at high frequencies.
It does not matter if the capacitor or resistor is placed first or last, the attenuation is the same.

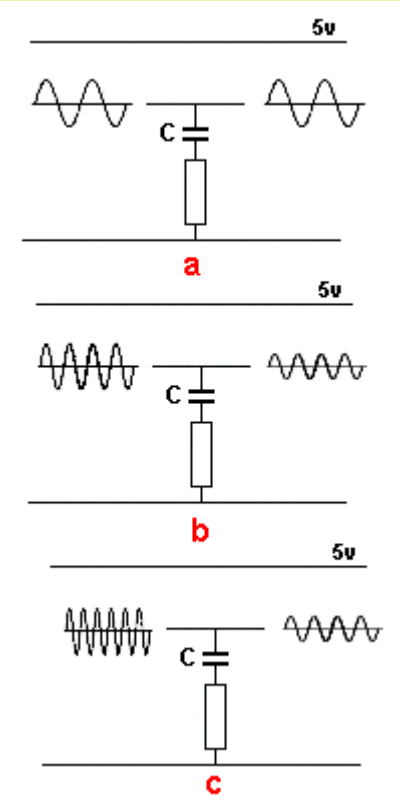

Fig 72d.

Fig 72d **Fig a** shows a capacitor and resistor connected in series between the "signal line" and 0v rail. With a low-frequency signal the capacitor can charge and discharge and the voltage across it will rise and fall so the effect on the amplitude of the signal is minimal.
The resistor has very little effect on reducing the amplitude. The top plate of the capacitor rises and falls with the signal and the bottom plate rises and falls very little.

As the frequency increases, the capacitor cannot charge and discharge fast enough and more of the energy of the signal goes into charging and discharging it. The top plate of the capacitor is rising and falling very quickly and this is making the lower plate rise and fall a small amount. This puts a small current though the resistor and this has an effect on reducing the amplitude.
The amplitude of the output is reduced as shown in Fig **b**.

As the frequency is increased further as shown in dia **c**, the top plate of the capacitor is rising and falling as fast as it can and the lower plate is rising and falling too. This puts most of the amplitude-loss in the resistor but the signal is not reduced any more.
It does not matter if the capacitor is above or below the resistor, the attenuation is the same.

Once you have a concept of the way a capacitor reacts to a high and low frequency, you can see how a circuit will pass or prevent (attenuate) a signal.
There are many different types of filters and they are all designed to improve the output of a poor signal, such as removing background "hiss" or "rumble" in audio recordings.
The following two circuits show the effect of adding capacitors and resistors between the output and input:

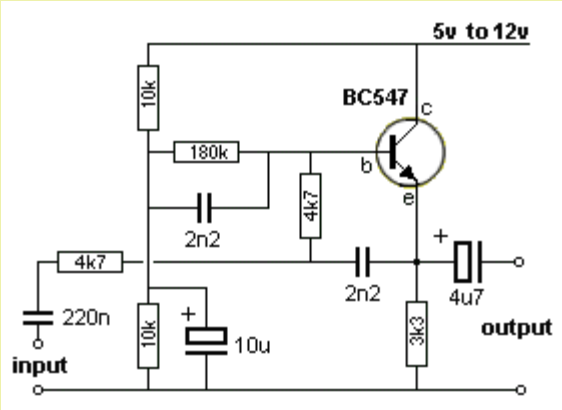

Fig 72e.

Fig 72e is a low-pass filter that provides unity voltage gain to all frequencies below 10KHz, but it rejects all frequencies above 10KHz at 12dB per octave. It is used to remove high frequency noise from audio recordings.

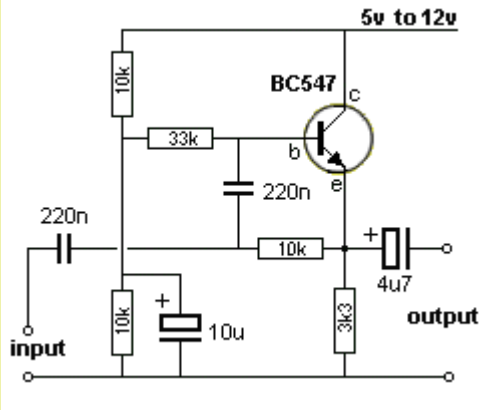

Fig 72f.

Fig 72f is a high-pass filter that provides unity voltage gain for all frequencies greater than 50Hz. However, it provides 12 dB per octave rejection to all frequencies below 50Hz. It is used to remove low frequency noise from audio recordings.
The transistor is configured as an emitter-follower biased at about half the supply value by the low-impedance junction formed by the top 10k resistor and the lower 10k in parallel with the 10u electrolytic.
Negative feedback applied through the filter network of the 33k and 220n and the 10k and 220n creates an *active* filter response.

SQUARE-WAVE TO SINEWAVE

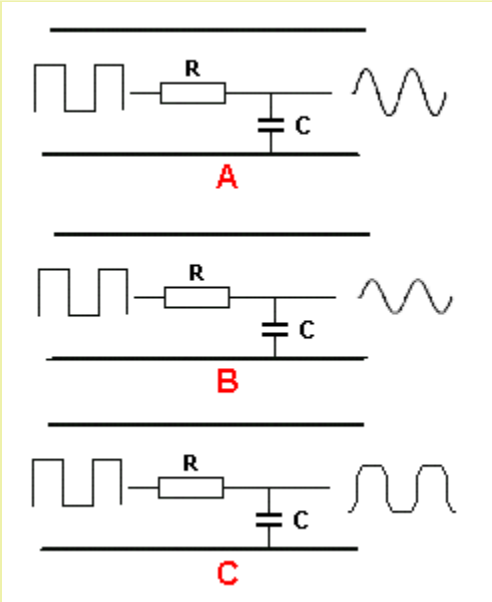

Square-wave to Sinewave

Converting a square wave to a sinewave can be done with a capacitor and resistor in series.
The capacitor takes time to charge and discharge, (according to the value of the resistor) and the output of the circuit is where the two components join.
The circuit is actually a **TIME DELAY** circuit, but this time we are monitoring the rise and fall of voltage on the capacitor, rather than just detecting the value after a period of time.
The Square-wave to Sinewave circuit is drawn slightly different to the Time Delay circuit so you can see what is happening.
The resistor is drawn at an angle of 90 degrees to the capacitor to show the signal is attenuated (reduced) in the resistor and appears across the capacitor as an amplitude.
The value of the resistor and capacitor are important.
When they are the correct values, the signal is a very-good sinewave with maximum amplitude as shown in diagram **A**.
When the values are too high or too low, the result is shown in figures **B** and **C**. .

THE "DIGITAL" STAGE - or Digital State also called the DIGITAL CIRCUIT or DIGITAL TRANSISTOR

There is no such thing as a **DIGITAL TRANSISTOR** or an **AUDIO TRANSISTOR**.

All transistors are just "**TRANSISTORS**" and the surrounding components make the transistor operate in **DIGITAL MODE** or **ANALOGUE MODE**.
It's a bit like saying money is: "food money" or "petrol money."
But we have some transistors that have inbuilt resistors to make it suitable for connecting to a digital circuit without the need for a base resistor.
Here is the datasheet for an NPN transistor BCR135w and PNP datasheet for BCR185w.
These transistors are called "**Digital Transistors**" because the "base lead" can be connected directly to the output of a digital stage. This "lead" or "pin" is not really the base of the transistor but a 4k7 (or 10k) resistor connected to the base allows the transistor to be connected to the rest of a digital circuit.
You cannot actually get to the base. The resistor(s) are built into the chip and the transistor is converted into a "Digital Transistor" because it will accept 5v on the "b" lead.
The 47k is not really needed but it makes sure the transistor is fully turned OFF if the signal on the "b" lead is removed (in other words - if the input signal is converted to a high-impedance signal - see tri-state output from microcontrollers for a full explanation).
This transistor is deigned to be placed in a circuit where the input changes from low to high and high to low and does not stop mid-way. This is called a DIGITAL SIGNAL and that is one reason why the transistor is called a digital transistor. (However you could stop half-way but the transistor may heat up and get too hot).
Any transistor placed in a digital circuit can be called a "digital transistor" but it is better to say it is operating in **DIGITAL MODE**.

All the circuits and stages we have discussed have been amplifiers for audio signals.
However there is another signal that can be processed via an amplifier. It is called a digital signal or "Computer" signal. It is a signal that turns a transistor ON fully or OFF fully.
The simplest example of a digital circuit is a torch. The globe is either ON or OFF. But a torch does not have any transistors. We can simply add a transistor and the circuit becomes DIGITAL CIRCUIT.
A Digital Circuit has 2 STATES: ON and OFF. It is never half-ON or half-OFF.

The secret to turning a transistor ON fully is base current. If you supply enough base current the transistor will turn ON FULLY.
The Digital Circuit is the basis of all computers. It produces an outcome of "0" when not active or "1" when active. This is called POSITIVE LOGIC.

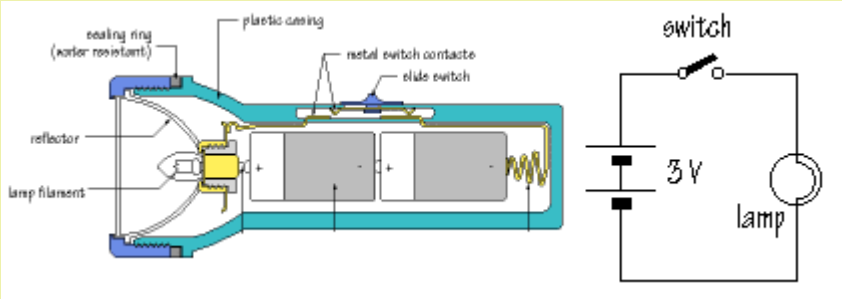

Fig 72.

Fig 72. A TORCH is an ON-OFF circuit.
A Digital circuit is an ON-OFF circuit.

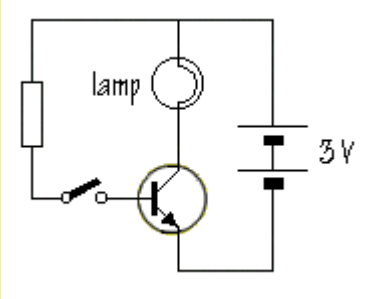

Fig 73.

Fig 73. This is the simplest DIGITAL CIRCUIT. The globe illuminates when the switch is closed.
Whenever a transistor is used in a stage that has a defined ON state and OFF state, it is using the OFF and ON state of the transistor and the transistor is called a **DIGITAL TRANSISTOR**.
It is simply an ordinary transistor used in a "**DIGITAL WAY**."
It is **NOT** a special type of transistor.

Two reasons why a Digital Circuit was invented:
1. It produces either "0" or "1" (LOW or HIGH) and these are accurate values. By combining millions

of "digital circuits" we can produce counting and this is the basis of a computer.
2. When a circuit is OFF, it consumes no power. When a circuit is fully ON the transistor also consumes the least power. This is because the globe is illuminated brightly and the transistor remains cool - as it has the lowest voltage across it.
The "ON" "OFF" states are called LOGIC STATES or DIGITAL STATES and when two transistors are put together in a circuit with "cross-coupling" they alternately flash one globe then the other.

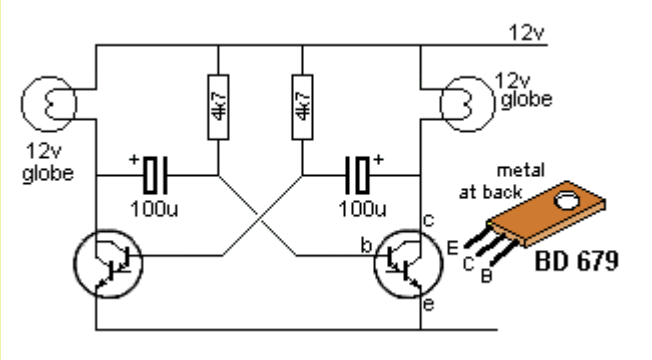

Fig 74.

Fig 74. This circuit is called a **FLIP FLOP** or **ASTABLE MULTIVIBRATOR**.
(AY-STABLE - meaning not stable)

THE TRANSISTOR AS A SWITCH

Using a transistor as a switch is exactly the same as using it in **DIGITAL MODE** or in a **DIGITAL CIRCUIT** or in a **LATCH CIRCUIT** or any other circuit where the transistor changes from OFF state to ON state VERY QUICKLY.
A transistor in this type of circuit is called a **SWITCHING TRANSISTOR** and it may be an ordinary audio transistor but it is called a switching transistor when used in a switching circuit.
The two Darlington transistors in **Fig 74** are SWITCHING TRANSISTORS and the circuit is an **ASTABLE MULTIVIBRATOR.**
One of the most common circuits is used to activate a relay. A relay must be turned ON or OFF. It cannot be half-on or half-off. The transistor changes from OFF to ON very quickly. It is called a switching transistor.
All transistors used in a **DIGITAL CIRCUIT** are switching transistors. **DIGITAL CIRCUITS** or **DIGITAL LINES** are either **HIGH** or **LOW**.
When a digital transistor is turned **ON** (saturated) the output is LOW. When a digital transistor is **OFF** the output is HIGH. The output is taken from the collector of a common-emitter stage.
This is called two MODES of operation. **ON** and **OFF**.
Any circuit that operates in **TWO MODES** is called a **DIGITAL CIRCUIT**.

DRIVING A RELAY

Any circuit that drives (powers) a relay is essentially a DIGITAL CIRCUIT. Sometimes the driving circuit can gradually turn ON and when the collector current is sufficient, the relay pulls-in.
When the collector current falls to a lower value, the relay drops-out.
We like to think of the driver stage as a digital stage so that we guarantee the relay will pull-in and drop-out.
Here's an important feature that has never been mentioned before:
A relay must pull in quickly and firmly so the contacts close with as much pressure as possible. This prevents arcing when closing and opening and ensures a long life for the relay.
That's why the driver circuit should be an ON-OFF or DIGITAL design.
The following circuits are NOT high-speed, but will activate a relay successfully.

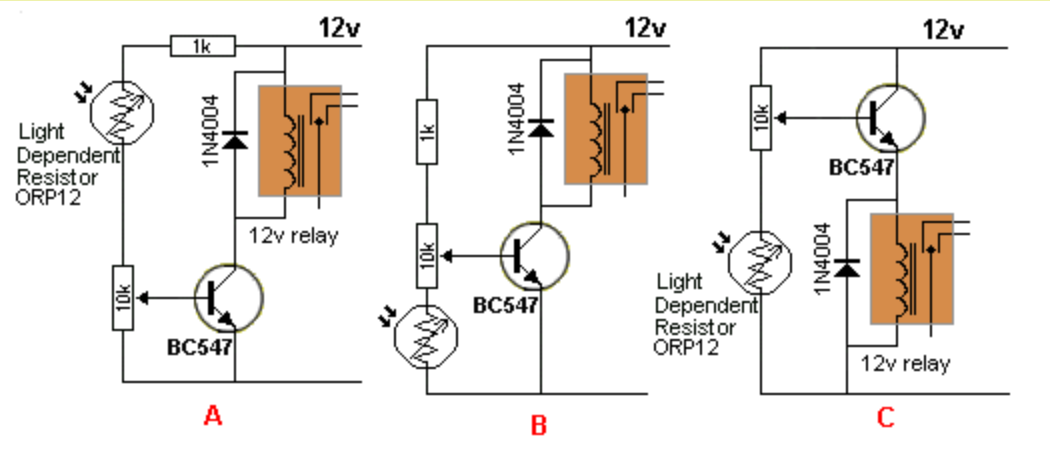

Fig 74a.

Circuit **A** activates the relay when light falls on the LDR. The level of illumination can be adjusted by the 10k pot.
Circuit **B** activates the relay when the illumination reduces. The level can be adjusted by the 10k pot.
Circuit **C** is an emitter follower and although it works in a similar way to circuit B, the voltage on the collector is less than 12v by about 1v and this creates extra loss and added temperature-rise in the transistor.

A 12v relay ***might*** work on a 9v circuit, but as we said above, the relay needs to close with as much pressure as possible to prevent the contacts arcing.
A 6v relay will work on a 12v circuit if you add a 5v1 or 5v6 zener in series with the coil.
A 12v relay will work on a 24v circuit if you add a 12v zener.
If the driver transistor turns on and **OFF** very fast, you will need a diode across the coil to prevent the back voltage damaging the transistor when the relay turns OFF.
The circuits above operate very slowly and a diode is not needed.

DRIVING A RELAY via CONSTANT CURRENT

A relay can be driven by a circuit called a **CONSTANT CURRENT CIRCUIT** and this means the maximum current delivered to the relay is fixed by the driving transistor. This means the supply voltage can rise higher than the recommended voltage and the relay will still be supplied with its rated coil current.
The circuit can also be called **CURRENT LIMITING** or **CURRENT CONTROLLING** or **MAXIMUM CURRENT**.
For this circuit to work you must know the current required by the coil for it to pull-in effectively.
This value can be obtained from the specification sheet for the relay. It will specify the coil voltage and the coil resistance.
In our example the coil is 12v and the resistance is 360 ohms. This identifies the relay as requiring 33mA to close the contacts.
Most relays will work on a slightly lower voltage and slightly higher voltage, but if the supply ranges from 12v to 24v, you need this type of circuit:

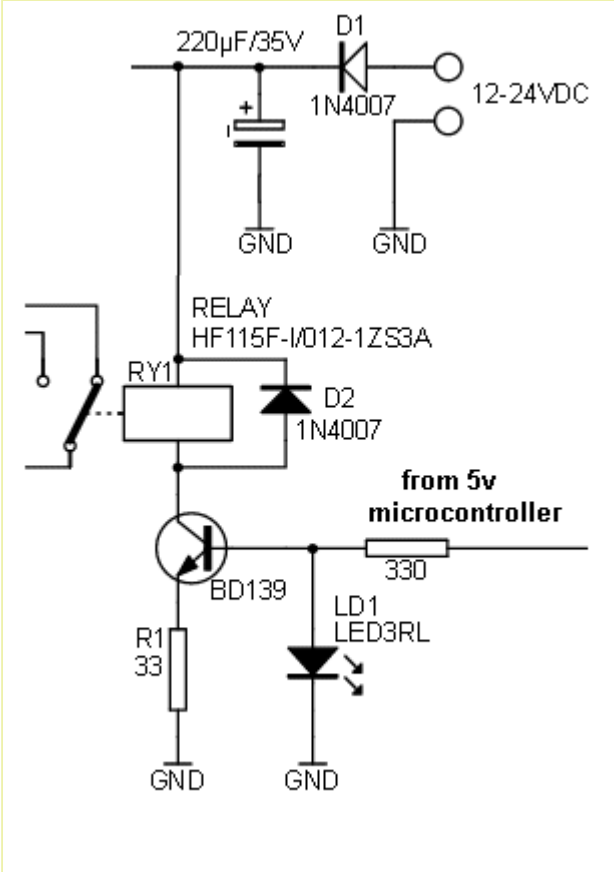

The BD 139 only allows (a maximum of) 33mA to flow because the base sees 1.7v due to the characteristic of the red LED.
The voltage between base and emitter is 0.7v and this means 1v will be dropped across the 33R when the current rises to 33mA.
Suppose you fit a relay requiring 100mA. If it is a 12v relay, it will have about 120R coil.
The transistor will turn ON and the current will increase. As soon as the current reaches 33mA, the voltage across the 33R will be 1v and since the transistor is only seeing 1.7v on the base, if the current rises any further, the voltage across the 33R will rise and the voltage between base and emitter will be less than 0.7v. This will cause the transistor to turn OFF slightly.
This means only 33mA will flow through the relay and it will not be enough to close the contacts. The relay will not work.
If you increase the supply from 12v to 24v, the current will not rise above 33mA and the relay will still not work.
If you fit the 33mA relay and increase the voltage from 12v to 24v, only 33mA will flow though the relay and 12v will appear across it. The other 11v will appear across the collector-emitter terminals of the transistor and 1v will be across the 33R.

THE UNIJUNCTION TRANSISTOR etc

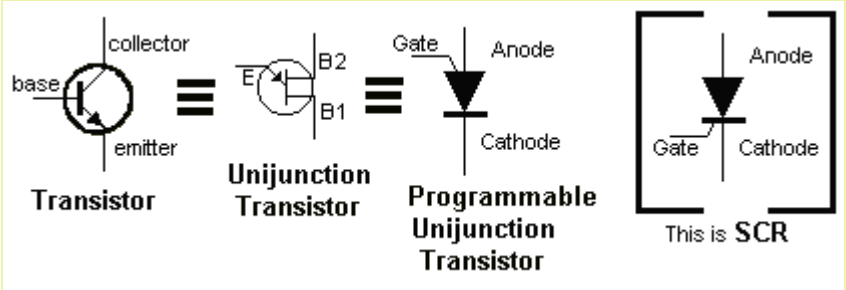

The Unijunction Transistor (UJT) and the Programmable Unijunction Transistor (PUT) and the ordinary transistor ARE ALL THE SAME.
A voltage on the base or the "E" lead or the Gate, will turn them all on and the resistance between all the leads will reduce to a small value. Actually a small voltage will develop between the leads and this is called a characteristic voltage and cannot be altered.
BUT here are the differences. The voltage on the base of the ordinary transistor is about 0.7v to turn it ON. The voltage on the Unijunction Transistor can be up to 3.5v The voltage on the Gate for the PUT is about 0.7v and can be slightly higher or lower.
When the voltage is removed from the base, "E", or Gate, the device "turns OFF."
If you add a voltage divider to the base of the ordinary transistor, you can turn it on at say 1v or 2.6v or any value. You can call this "programming the transistor"
That's what a Programmable Unijunction Transistor is. It is an ordinary Unijunction Transistor that can be placed in a circuit with voltage divider resistors so the device turns on at a particular voltage.

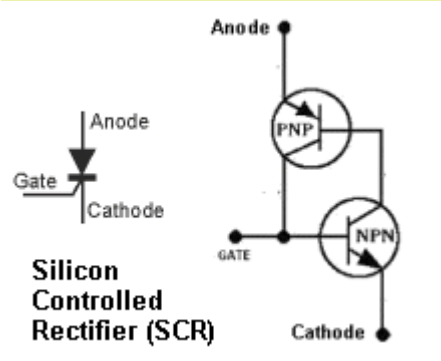

A Silicon Controlled Rectifier has a different feature. When the voltage on the Gate turns the SCR ON, it "latches" and stays ON until the supply voltage is removed and the current through the SCR falls to zero.
The two diagrams opposite are NOT identical. The SCR remains "latched" via the Gate. Making the Gate 0v, will not unlatch the SCR.

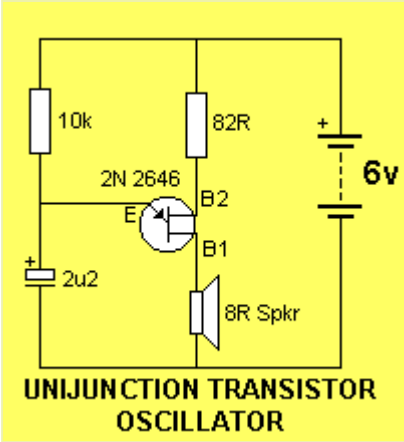

The UJT circuit shows a typical arrangement with a low-impedance device, such as a speaker, between B1 and 0v rail. The way it works is this: The capacitor charges via the 10k resistor. During this time the resistance between B1 and B2 is infinite. The charging is a sawtooth waveform because the charging is a rising gradient and the discharge is very rapid - into the speaker. The emitter detects when the voltage rises to about 3.5v to 4v (this is a characteristic of the UJT device) and at this point the transistor "turns on" and the resistance between the Emitter and B1 becomes very low and is effectively equivalent to a diode in forward-bias. The voltage (the energy) in the capacitor is then passed to the speaker and this produces a "click." This is the only way the speaker gets its energy. The voltage across the capacitor falls very rapidly and when it reaches less than 0.7v, the transistor turns off and the cycle repeats.

Why can't you use an ordinary transistor in the circuit above?

Because an ordinary transistor turns ON slowly when the voltage is 0.55v and turned on more at 0.6v and turned ON fully at about 0.7v. There is only a very small "gap" between 0.55v and 0.7v and this would be the charging and discharging voltage for the electro. But during this range the transistor is turning ON too and effectively removing the charging capability of the 10k to charge the electro and thus the circuit would never work.
You can't use an SCR because it "latches" and the cycle will not repeat.

One of the main differences between Unijunction and PUT:

A Unijunction Transistor needs about 2v to 3.5v to turn ON.
A **P**rogrammable **U**nijunction **T**ransistor turns on at 0.2v to 1.6v (normally 0.5v to 0.7v)

LATCH CIRCUIT - an SCR made with transistors

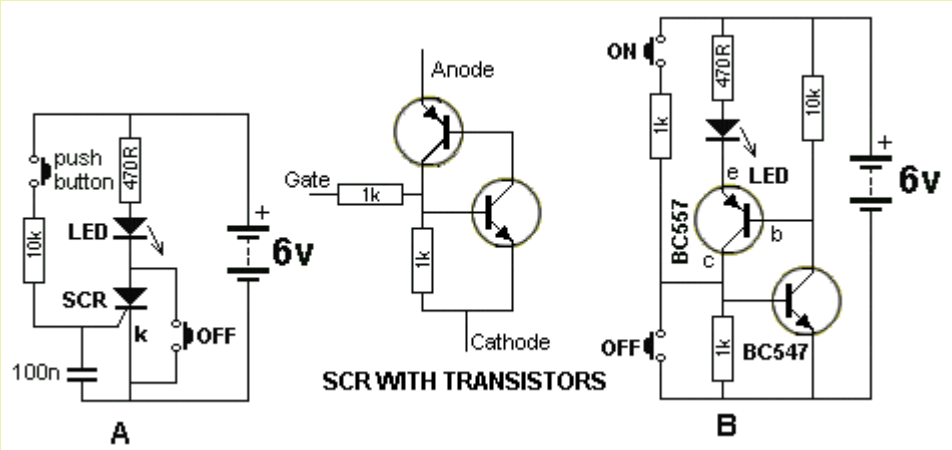

Fig 75. Latch Circuit

Fig 75. Circuit B is a LATCH. The two transistors instantly change from the OFF state to the ON state. This is also classified as a DIGITAL CIRCUIT. The circuit can also be called an SCR made with transistors. Circuit A shows an SCR in action. The top switch turns the SCR ON and it stays ON

when the button is released. To turn the SCR off, the lower switch is pressed.
The SCR in circuit A produces a 'LATCH.'
The SCR can be replaced with two transistors as shown in circuit B.

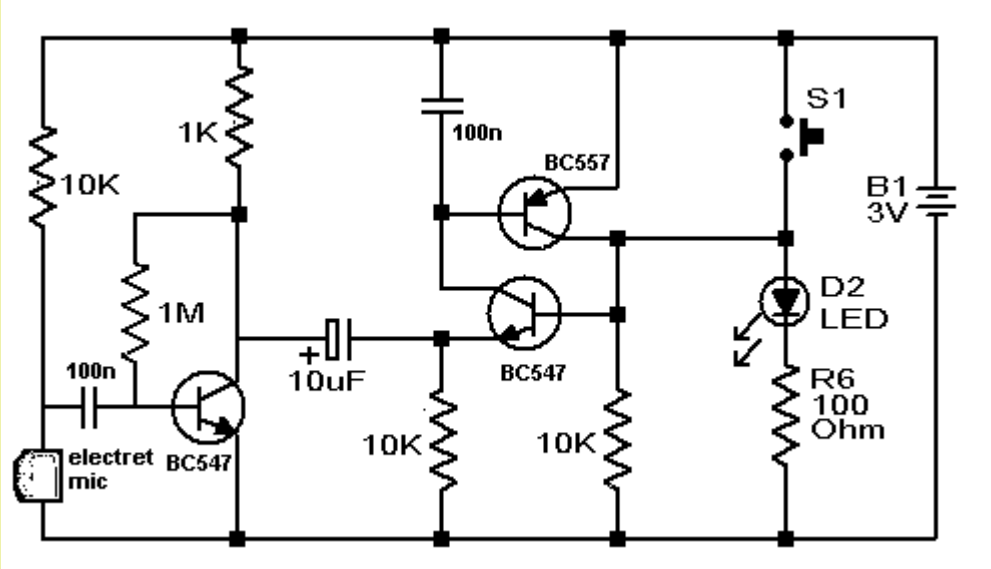

Fig 75aa. Latch Circuit

Fig75aa is a LATCH and the PNP/NPN transistors are "latched-on" by pressing S1. The circuit will also turn on with a resistor as high as 15k across S1 as we only need to put 0.6v on the base of the BC547 transistor. The 10k on the base forms a voltage divider and this determines the resistance of the "turn-on" resistor. The emitter of the BC547 transistor does not move when this voltage is applied and the collector of the BC547 pulls the base of the BC557 down to turn the PNP transistor ON. This action takes over from the 15k resistor and the two transistor remain ON.
The base of the BC547 is pulled to nearly rail voltage and the emitter is 0.6v lower. The 10u electrolytic charges to cater for the voltage-difference between the collector of the first transistor and the voltage on the emitter of the BC547.
When the first transistor turns on, the voltage on the collector reduces and this pulls the positive lead of the 10u towards the 0v rail.
The negative lead of the 10u cannot fall as it is connected to the emitter of the BC547.
This means the 10u discharges and when the first transistor turns off, the positive lead rises and takes the negative lead with it. This reduces the voltage on the emitter of the BC547 and the transistor turns OFF.
This is how the LED turns off.
Further blowing into the microphone will make the emitter lead of the BC547 rise and fall and this will make the LED flicker, just like trying to blow out a candle.

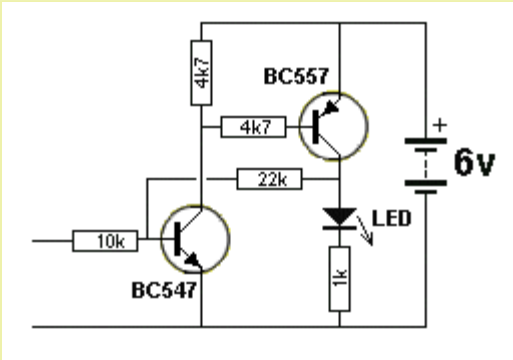

Fig 75a. Latch Circuit

Fig 75a. This circuit is a LATCH. The two transistors instantly change from the OFF state to the ON state when the input voltage rises above 0.6v
The 22k **POSITIVE FEEDBACK** resistor keeps the circuit **ON** when the input voltage is removed.
The 6v supply must be removed to turn the LED off.

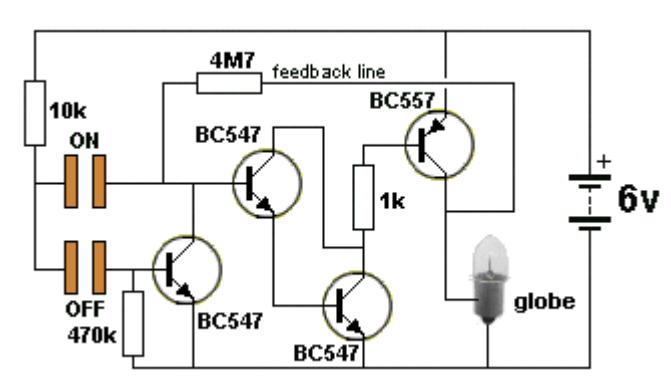

Fig 76. Touch Switch

Fig 76. This is a circuit of a TOUCH SWITCH. Touching the "ON" pads turns ON the second and third transistors as they are a SUPER-ALPHA PAIR or DARLINGTON arrangement and have a very high input impedance and very high gain. The output of this pair goes to a PNP transistor that amplifies the 5mA current from the Darlington to deliver 250mA to the globe.
A feedback line from output to input via a 4M7 keeps the circuit ON when your finger is removed and provides a "Keep-ON" voltage (and current).
The first transistor removes this **"Keep-ON" voltage and current** when a finger is placed on the OFF pads. .

How can you tell a **DIGITAL CIRCUIT** from an **ANALOGUE CIRCUIT?**
1. Absence of capacitors. There are **NO** capacitors in a **DIGITAL CIRCUIT.**
2. A switch or push-button will be activating the circuit.
3. The circuit will be driving a **DIGITAL** or **ON - OFF** item such as a relay or globe.

The two states of a transistor in a **DIGITAL CIRCUIT** are: OFF - called "**CUT-OFF**" and ON - called "'**SATURATION**."
To saturate a transistor the base current is simply increased until the transistor cannot turn on any more. In this state the collector-emitter voltage is very small and the transistor can pass the highest current and the losses (in the transistor) are the lowest.

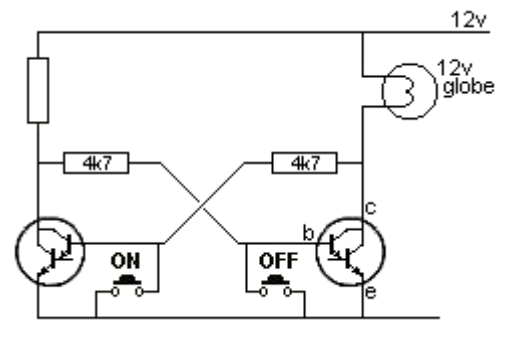

Fig 77.

Fig 77. This circuit has only two states. ON and OFF. The ON button turns off the first transistor so the second transistor turns the globe ON.
This is called a TOGGLE ACTION and the circuit is a BINARY CIRCUIT or BISTABLE CIRCUIT called a BISTABLE SWITCH or a bistable of the MULTIVIBRATOR family (**BISTABLE MULTIVIBRATOR**).
It can also be called a LATCH as it stores **one bit of information** and is the basis of a COMPUTER.

ILLUMINATING A GLOBE (Lamp)

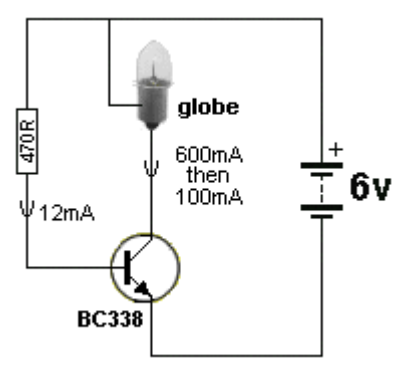

Fig77a. The base needs 12mA to "turn on" the globe

Illuminating a globe is not easy. A globe (lamp) takes 6 times more current to get it to start to glow because the filament is cold and its resistance is very low.
For instance, if a lamp requires 100mA, it will take 600mA to get it to start to glow.
This means the transistor must be capable of delivering 6 times more current and when the filament is glowing, the current will reduce to 100mA.
This means a transistor capable of delivering 800mA (BC337, BC338) will be sufficient for the job, however the gain of the transistor will have to rated at 50 because the current is getting near to the maximum.
The base current will have to be 600/50 = 12mA. You need to supply the base with 12mA and the lamp will illuminate. When the lamp is glowing, the transistor only needs about 1-2mA, however it is difficult to reduce the current to the base and if the 12mA is supplied to the transistor, it simply means that 2mA will be used by the transistor and 10mA will pass through the base-emitter junction and be wasted.

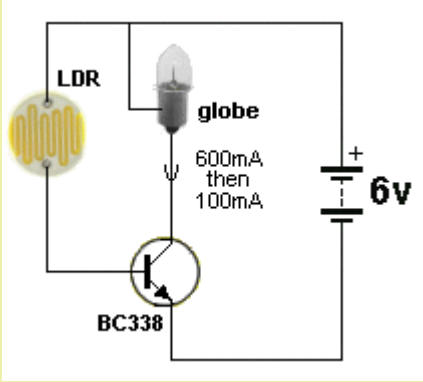

Experiment:
Shine a light on the LDR and the globe will gradually get brighter.

You can change the 470R in the diagram above for an LDR (Light Dependent Resistor) and watch the globe illuminate.
The LDR chosen for the experiment has a resistance of 300k when in the dark and about 100 ohms when a bright light is shone on it. Do not shine a light too close to the LDR as its resistance will be so low that a very high base current will flow.
If the circuit does not work, the globe requires more than 600mA to get it to start to glow or 100mA when fully illuminated.

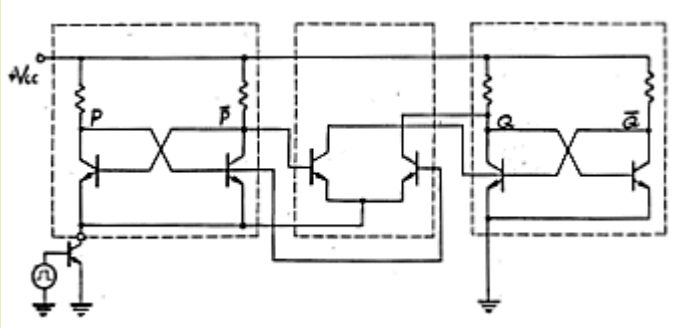

Fig 77b.

Fig 77b. This is part of a counting circuit and since it takes many transistors to create a circuit to count to "2" it is not practical to make it using discrete components. That's why INTEGRATED CIRCUITS were invented where dozens, then hundreds then thousands then millions of transistors are connected to produce counting chips and "bit-storing chips" and many other requirements.

Before we cover our next type of circuit, we will explain a 2-transistor directly-coupled arrangement from Figs 52 and 66. It is interesting as it can be used as a digital circuit or an analogue circuit.

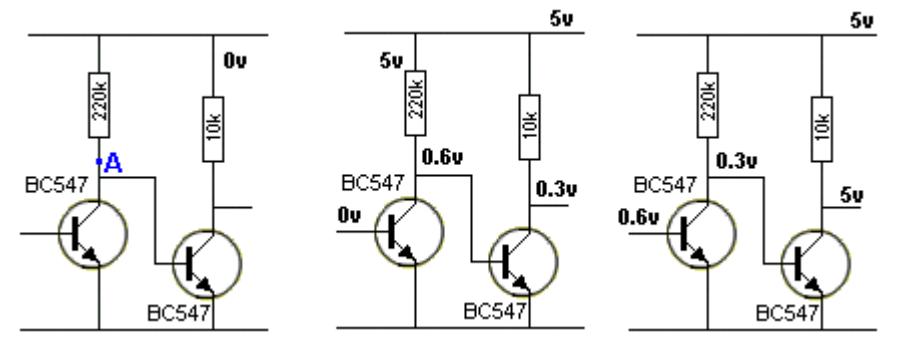

Fig 78.

Fig 78. Two facts to note:
1. Point "A" never rises above 0.6v as it is connected to the base of the second transistor.
2. When the first transistor is turned ON, the collector-emitter voltage is 0.3v and the second transistor is OFF - this is because the base of the second transistor needs 0.6v to turn ON.
In other words, when one transistor is **ON** the other is **OFF**. There is a very brief change-over point where the first transistor turns ON a little more and the second transistor turns OFF a very large amount. If you can find and maintain this change-over point, the two transistors will work in analogue mode with high gain but if you pass this point very quickly, the two transistors will operate as a switch in DIGITAL MODE.
We can turn this circuit into a DIGITAL CIRCUIT. The secret to doing this is FEEDBACK and the name of the circuit is a **SCHMITT TRIGGER:**.

THE SCHMITT TRIGGER

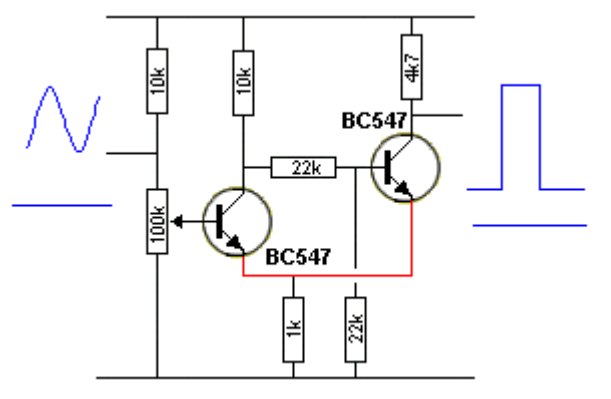

Fig 79a. Schmitt Trigger Circuit

Fig 79a. A **Schmitt Trigger** takes a slowly rising or falling voltage and turns it into a fast-acting ON-OFF signal. The secret is the feedback line shown in red.
The circuit can also be called a "sinewave-to-square-wave generator."
When the input is LOW the output is LOW.
It is a form of bi-stable multivibrator.
The distance between the lower voltage and the upper voltage (at which the circuit changes state) is called the **HYSTERESIS GAP**. This can be widened or narrowed via the 1k resistor (the 100k pot needs to be re-adjusted when the 1k is changed).

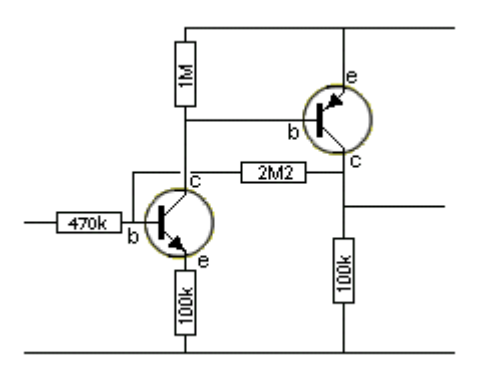

Fig 79aaa. Basic Schmitt Trigger

Fig 79aaa. The basic **Schmitt Trigger** only needs 3 resistors. This is shown in **Fig 79aaa.** When the first transistor is conducting (turned ON) and the second transistor is OFF, a voltage develops across the 1k due to the collector-emitter current of the first transistor. When the first transistor turns OFF, about the same current flows though the 10k collector-load, through the base of the second transistor, plus current flows through the 4k7 load resistor. This means about three times more current flows through the 1k emitter resistor and thus the voltage across it will increase about 3 times. This is the **HYSTERESIS** voltage of the circuit.

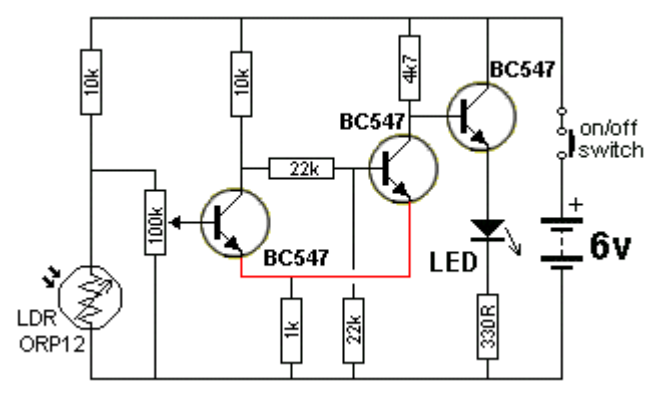

Fig 79. Schmitt Trigger Circuit

Fig 79. This circuit takes a slowly rising or falling voltage and turns it into a fast-acting ON-OFF signal to operate a LED or relay.
This is done via the positive feedback line shown in red. It is called positive feedback because it ADDS to the change to speed it up.
This circuit is fully explained in the: Talking Electronics website CD.

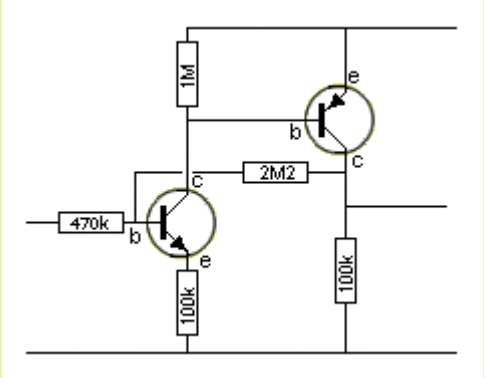

Fig 79aa. A Schmitt Trigger

Fig 79aa is a Schmitt Trigger made from NPN and PNP transistors.
As the voltage on the input rises, the first transistor is turned on slightly and a small voltage is developed across the 100k emitter resistor that reduces the "turn-on" effect slightly. This means the input voltage must rise more. As the input voltage rises more, the second transistor starts to turn on and the collector voltage rises. This voltage is passed to the base of the first transistor to assist the input voltage and because the collector voltage of the output transistor rises considerably, it has a large effect on turning ON the first transistor. They turn each other ON until they are both fully turned ON.

The 2M2 has taken over from the 470k and made the base of the input transistor slightly higher. The input voltage has to drop a small amount before the pair will start to turn off.
The circuit has created a small gap between the low and high input voltage (and between the HIGH and LOW input voltages) where the circuit does not change from one state to the other. This gap is called the **HYSTERESIS GAP**.

The output of the Schmitt Trigger in **Fig 79aa** is classified as "high impedance" (due to the value of the 100k on the output) and this must be connected to a stage with a high input impedance so the voltage on the output of the Schmitt Trigger is not affected.

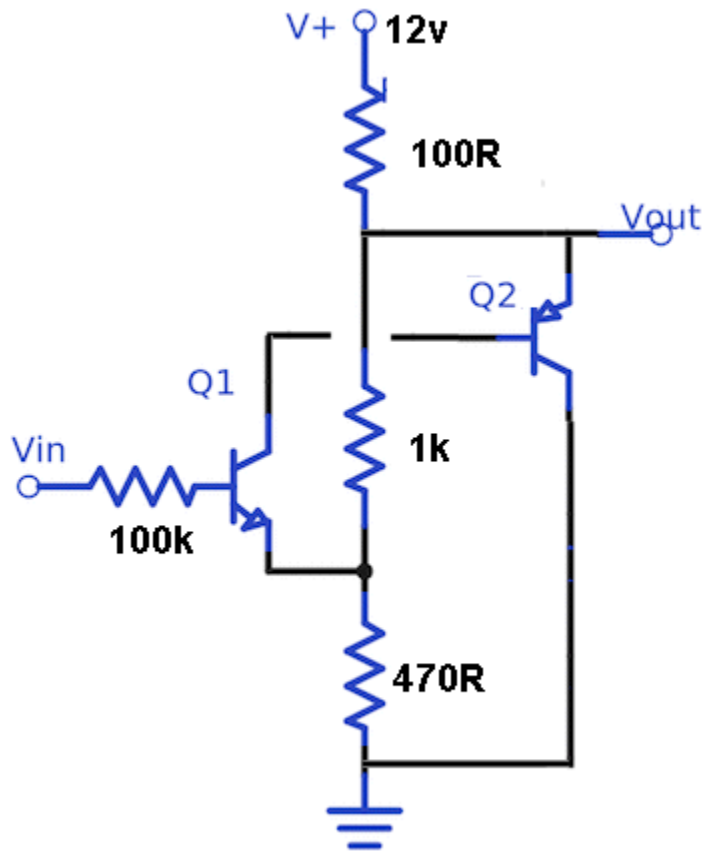

Here is another Schmitt Trigger:
The only problem with this circuit is the load is not pulled very close to the 0v rail. The minimum voltage across the PNP transistor is about 1.5v, however the circuit works well and provides a wide voltage between ON and OFF. It has been tested with a load of about 30mA across the 100R. Changing the 470R to 1k increases the "gap."

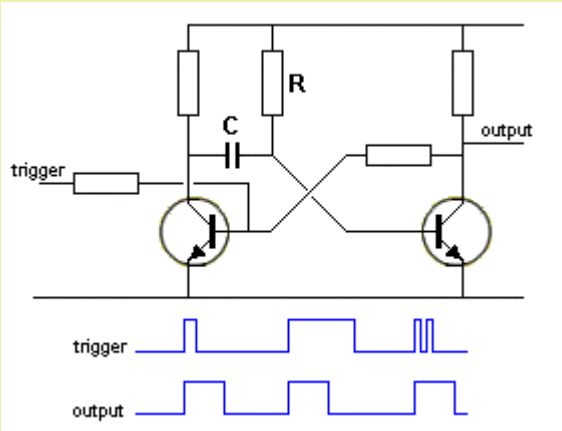

Fig 79ab. The Monostable or "Pulse Extender."

Fig 79ab. Before we leave the MULTIVIBRATOR family, the third type of Multivibrator is the **MONOSTABLE MULTIVIBRATOR**.
It is only stable in **ONE** state. This is called the "rest" state. The other state is "timed" via a capacitor.
The circuit is triggered and it changes to the other stage and a TIMING CAPACITOR **C** charges via a resistor **R** (called a TIMING CIRCUIT) and a multiplication of the two produces a value called the **time constant.** When it is charged, the circuit drops back to the rest state.
While the output is high, input pulses (trigger pulses) have no effect on the circuit. Also, if the input is triggered and kept high longer than the **time constant** of **C** and **R**, the output will NOT stay high for longer than the **time constant**.
This circuit is also called a **PULSE EXTENDER**.

GATES

We have described the transistor as an amplifier and the fact that **POSITIVE FEEDBACK** can turn a transistor **ON** more and more, so it changes from: "**not-turned-ON**" to **"fully-turned-ON"** in a very short period of time. When a transistor is operating in this mode, it is said to be in **DIGITAL MODE.** We saw the effects of **DIGITAL MODE** in Figs 74, 75, 76, 77 and 78. The advantage of **digital mode** is the transistor dissipates the least heat in either state.
The transistor can be put into a chip (IC - Integrated Circuit) and used in Digital Mode. When this is done, the transistor is put into a circuit called a **GATE. A Gate** is simply a **BUILDING BLOCK** in which the output changes from **LOW** to **HIGH** or **HIGH** to **LOW** very quickly. The simplest **GATES** are called AND, OR, NAND, NOR and NOT. In general a GATE operates on a 5v supply (this applies to gates in the TTL family. They cannot withstand a voltage higher than 5.5v. CMOS gates operate to about 14v-16v and some are up to 20v) and the input has to change from **LOW** to **HIGH** or **HIGH** to **LOW** very quickly and the output will change from **LOW** to **HIGH** or **HIGH** to **LOW** very quickly. You

may think the gate is not achieving anything, but most gates have 2 or more inputs and the output is "more powerful" than the input. The introduction of GATES revolutionised the development of the computer and was the beginning of the **DIGITAL AGE.**

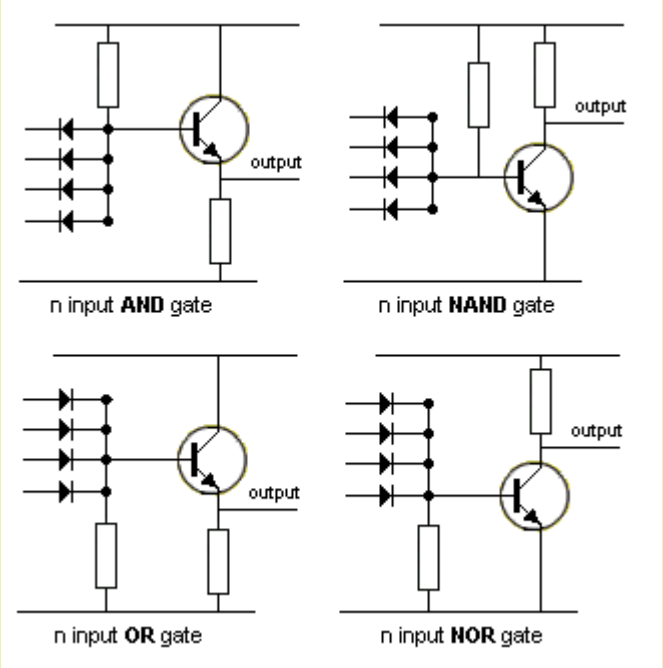

Fig 79ac.

Fig 79ac shows AND, OR, NAND, NOR and NOT gates produced with transistors.

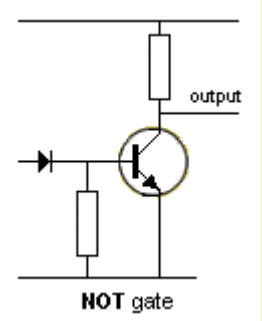

"n" indicates any number of inputs. ("n" is an unspecified number.)

We have shown circuits with the load (such as a speaker or LED) above the transistor or below (it cannot be in both places at the same time). The position of the LOAD introduces two new terms:

SINKING AND SOURCING

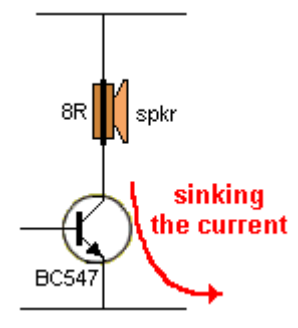

Fig 79b.

Fig 79b. When the speaker (LOAD) is placed above the transistor, the circuit is said to be **SINKING** the current. A BC547 does not have the collector-current to adequately supply an 8R speaker. You really need a BC338.

There is no advantage in one placement over the other. If the load is connected to "chassis" such as a globe in a car, the circuit will need to source the current.

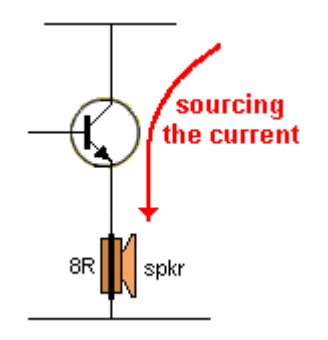

Fig 79c.

Fig 79c. When the speaker (LOAD) is below the transistor, the circuit is said to be **SOURCING** the current.

The only difference between the two circuits is the voltage on the base. Fig 79b will operate with a base-voltage less than 1v, while Fig 79c is an emitter-follower design and will need a voltage on the base from about 1v to full rail voltage.

INTERFACING

Interfacing simply means: "connecting." When a circuit connects a device (such as a microphone), to an amplifier, it is called **INTERFACING**. The characteristics of the microphone are matched to the input requirements of the amplifier. Or a relay may need to be connected to the output of an amplifier

(If the amplifier does not have enough current to turn the relay ON).
In most cases, the output of a circuit or a "pick-up" device (sometimes called a TRANSDUCER) does not have enough VOLTAGE or VOLTAGE-SWING or AMPLITUDE to drive the next circuit or device and it needs an amplifier.
That's why we have to add a circuit between.
The circuit we add has a number of names:
When it increases the CURRENT, we call it a **BUFFER**.
When it matches a high impedance to a low impedance or a low impedance to a high impedance, we call it **IMPEDANCE MATCHING**.
Or when we need an increase in voltage, it is called an **AMPLIFIER**.
In ALL "stages" (common-base, common-collector and common-emitter) the current is increased.
Interfacing can be as simple as adding a resistor or capacitor, but this is usually called "connecting" or "coupling".

We have learnt that all devices and circuits have an ability to deliver a "waveform" or "amplitude" or "voltage" and this can be weak or strong according to the amount of current it can deliver.
We have also learnt that this current may be delivered from the load resistor or from the device itself.
It does not matter how the current is delivered; the **size** of the current (the amount of current) is important.

We have also covered the fact that the input to a circuit (or "stage") requires current and when these two are equal, the matching is ideal.
But this rarely happens.
If the input requires **more** current, the voltage (or voltage-swing) from the previous circuit or device will be reduced. If the input requires less current, the voltage-swing will be affected a very small amount. But in **ALL** cases the voltage-swing will be reduced - because you ARE supplying SOME energy to the stage that follows.

Interfacing is not easy.
You have to know the **output voltage** of the device and the **current** it can supply.
The current it can supply is related to its **OUTPUT IMPEDANCE**.
OUTPUT IMPEDANCE basically means its output resistance. A low resistance or LOW IMPEDANCE means it is capable of delivering a HIGH CURRENT. A high-impedance device cannot deliver very much current. A stage with a high output impedance cannot deliver very much current.
All these terms are relative. When we say: "cannot deliver much current" the value of current can be less than 1uA or 50mA. It depends on the circuit we are discussing and if you are working with low-current circuits or power circuits.
We have also learnt that the input impedance of a stage can be high or low and the voltage-swing it will accept can be small or large. (for instance, an emitter follower stage will accept a large input voltage).
This gives us a wide range of values (parameters) that may need to be joined together - **INTERFACED**.
In some cases the output voltage of a device or circuit will be HIGH and by connecting a capacitor between the two stages, the output voltage will be "absorbed" in the capacitor and the energy from the output stage will be transferred. The "energy" is a combination of the voltage-swing and the current.
But if the output voltage is very small, we may need to amplify it to deliver a high voltage to a device.

This is the case in the following requirement.
A piezo diaphragm or electret microphone is required to be interfaced to the input of a microcontroller.
The output of these devices is about 10mV and the input of a microcontroller requires about 3.5v (3,500mV).
This involves an amplification (gain, amplification factor) of 10:3500 = 350 and requires two stages of amplification.
The output of a piezo and microphone are classified as high impedance and the input of a microntroller is also high impedance.
This means the two amplifying stages can be low-current stages (also called high-impedance stages) and the load resistors can be high-value (about 22k - 100k).
The following two circuits have been designed for this application:

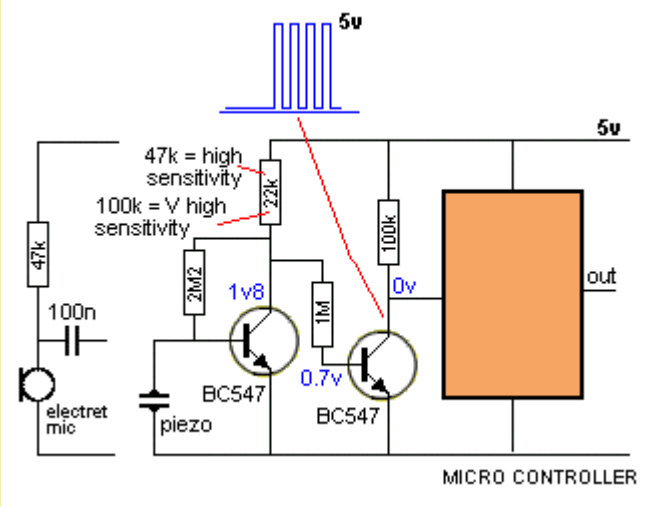

Fig 79d.

Fig 79d. In this circuit the first transistor is self-biased and the 2M2 base bias resistor turns the transistor ON and the voltage on the collector is only about 1.8v.
This means the collector has to drop by only 1.2v for the second transistor to turn off and the 100k will produce 5v on the input to the microcontroller.
If the transistor has a gain of 100, the electret mic or piezo has to produce a 12mV signal to activate the circuit.
When the load resistor is increased to 100k, the collector has about 850mV on it, and it only has to drop 300mV for the signal to enter the microcontroller. This makes the 100k load resistor produce a more-sensitive circuit. When no audio is being detected, the output of the second stage is 0v.

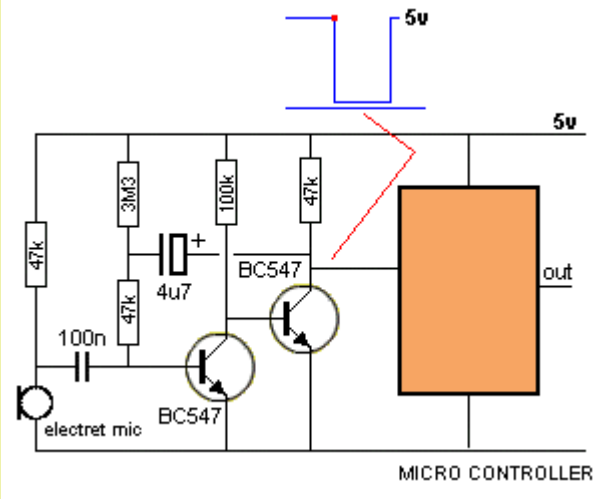

Fig 79e.

Fig 79e. This circuit has been taken from Fig 71acc. It is a bootstrap circuit and produces a very clever "switch."
The circuit sits with the first transistor turned ON and the second turned OFF as can be seen in the first line at the top of the output waveform - up to the red dot. When a signal is picked up by the microphone (this is the red dot on the waveform),
a negative-going signal of about 100mV will turn the transistor off slightly and the second transistor will turn ON. The 4u7 will be "pulled down" and completely take over from the signal from the microphone. It will turn the first transistor off more and the second transistor will be turned ON more. This will continue until both have completely changed states.

They will stay like this until the 4u7 is charged in the opposite direction and the base of the first transistor sees 0.7v. This causes the second transistor to turn off and the 4u7 rises and turns the first transistor ON more. The 4u7 gets slowly discharged and the circuit remains in this state.
The circuit produces a very clean output every time it detects audio.
The duration of the low in the graph can be shortened by reducing the value of the electrolytic.

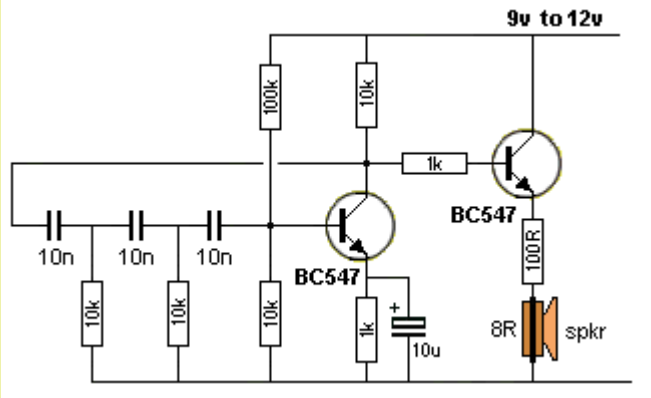

Fig 79f

Fig 79f interfaces a phase-shift oscillator (see **Fig 90**) to a speaker. This is a very difficult thing to do as the phase-shift oscillator has an output that is very close to rail-to-rail and any loading of the output will cause it to stop working.
In an attempt to interface the oscillator to a speaker we have added an emitter follower transistor and a 1k separating resistor, plus a 100R in series with the speaker. This should give a loading of about 20k and the circuit should work. Otherwise the 10k will have to be reduced or the 100R increased.

ANALOG TO DIGITAL

Many of the circuits we have described convert an **ANALOG** signal to a **DIGITAL** signal.
These are called **ANALOG TO DIGITAL CONVERTERS** but we have not given them this specific

name because we have been concentrating on other features.
We will now cover the concept of **Analogue to Digital Conversion**.
An ANALOGUE signal rises and falls but doesn't have any defined amplitude or frequency.
This signal cannot be delivered reliably to a circuit that requires a DIGITAL SIGNAL as the amplitude may not be large enough.
A **DIGITAL CIRCUIT** requires a **digital signal** and this type of signal is either a constant HIGH or LOW and the amplitude must be very close to rail voltage or almost 0v. And it must change from one state to the other **very quickly**.
Delivering a high amplitude analogue signal **may** be recognised by a digital circuit when it reaches a peak or goes to 0v, but this is not guaranteed or reliable.
In addition we may want the signal to be a CONSTANT HIGH when the audio is present.
This is what an **ANALOG TO DIGITAL** circuit will do. It will produce a constant HIGH when audio is present and ZERO (LOW) when the audio is not present. Or pulses that are nearly rail voltage and very close the 0v.

Recapping:
To convert an analogue signal to a digital signal we need to deliver ZERO OUTPUT (called a LOW output) when the signal has a small amplitude and a HIGH output when the signal has a high amplitude.
To do this we use a common-emitter stage, as it has a high voltage-gain and this is what we need.

There are many ways to convert an **Analogue signal** to a **Digital signal** but the basic way is to amplify the signal by a large amplification-factor so the resulting waveform will rise to the voltage of the rail (or even higher). It cannot go higher than rail voltage but you will see what we mean in a moment.
This is normally called "over-driving" the signal and if this is done in an audio circuit, the result is distortion. But we are not going to listen to the output, so we take advantage of this feature to produce a DIGITAL OUTPUT.

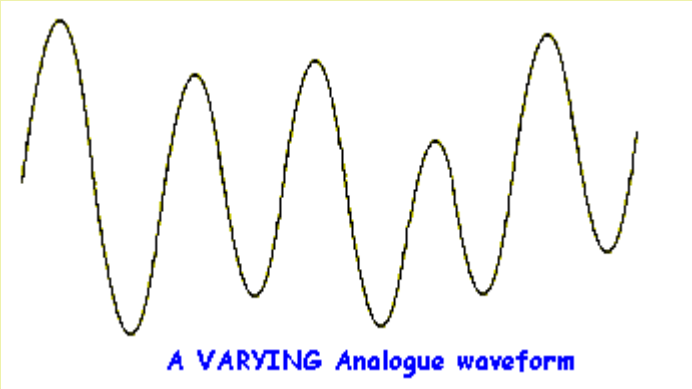

Fig 80a

Fig 80a shows an analogue signal. It is made up of lots of sine-waves and may be as high as 2v or only a few millivolts. Low-level signals are generally expressed in mV, to make them instantly recognisable and easy to talk about. In general this type of signal will be too small to be detected by a Digital Circuit. A Digital Circuit needs a signal greater than about 3,500mV so the waveform appears on the input line as a HIGH, during the peak of its excursion. It should be nearly 5,000mV for reliable detection.

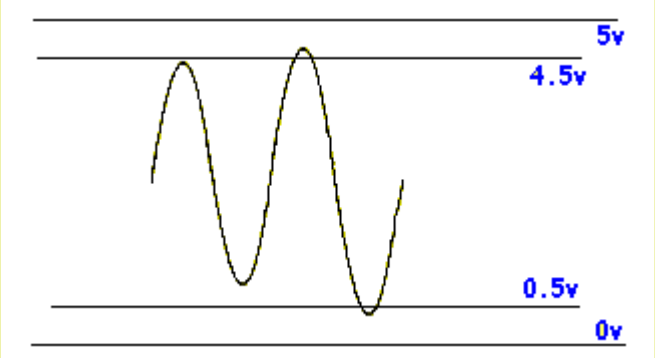

Fig 80b. A Digital Circuit will detect a waveform larger than 4.5v as a HIGH and less than 0.5v as a LOW

Fig 80b. Only the large excursion(s) will be detected by a Digital circuit as the other parts will not rise high enough to be detected. To increase the analogue signal to as much as 5,000mV, an amplifier is needed.

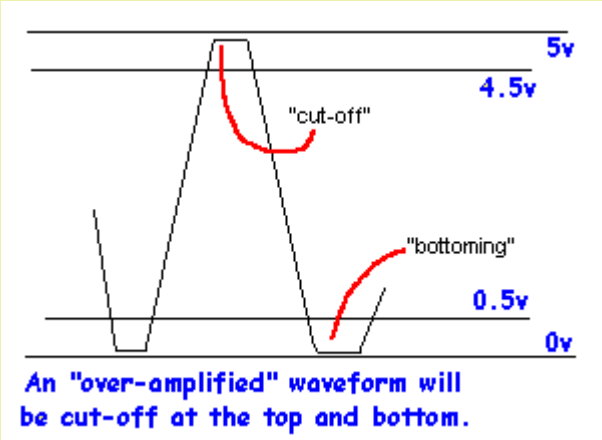

Fig 80c.

The amplifier maybe one or two stages, depending on the amplitude of the original signal. Each stage of an amplifier will increase the size of the signal about 70 times. If you are very lucky, you may get an amplification of 100x (100 times). Thus a 5mV signal with one stage of amplification will produce a 350mV to 500mV signal. This is not sufficient to be detected by a Digital Stage. Another stage will easily produce a full 5,000mV signal.
The second stage only needs to amplify the signal about 10 to 12 times and a higher gain simply drives the waveform into "**bottoming**" and "**cut-off**" as shown in **fig 80c**.

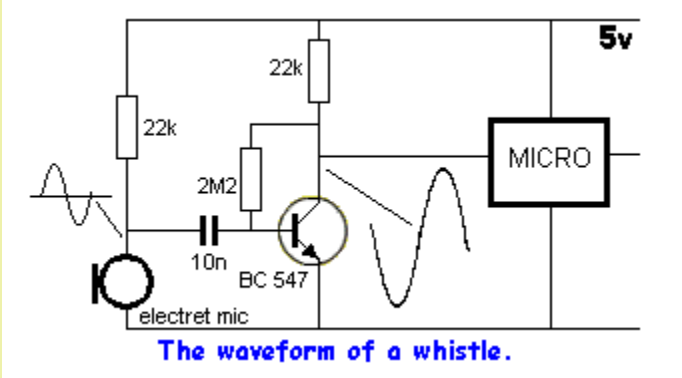

Fig 80d.

This means the waveform will be "clipped" at the top and bottom and converted to a fairly "square-ish" shape. Suppose you have a waveform that is higher than 5mV (say 30 - 50mV) and want to know if it will trigger a Digital Circuit with a single stage of amplification.
Connect the components as shown in **Fig 80d** and write a program to illuminate a LED when the waveform is detected.

There is only one problem with the circuit in Fig 80d.
At the end of a whistle or speech, the LED may be illuminated or extinguished. It all depends on the last cycle of the waveform. The circuit sits with the output approx mid-rail and the micro does not know if this is a high or low, and takes the reading by the direction of the last cycle.
Some of the inputs of a micro are Schmitt Triggered. This means a HIGH has to be 85% to 100% of rail voltage for it to be seen as a HIGH and between 20% and 0% to be seen as a LOW.
The non-Schmitt Trigger inputs see a LOW as 20% to 0% and a HIGH as above 2v for 5v operation.
If the last cycle went from zero to mid-rail the micro will see the waveform as a low on Schmitt Trigger inputs and a HIGH on the other inputs. This problem can be overcome by adding a second stage that only produces a LOW when audio is detected. It also increases the amplitude of the audio to guarantee triggering of the Digital Circuit. This is shown in **Fig 80e**.

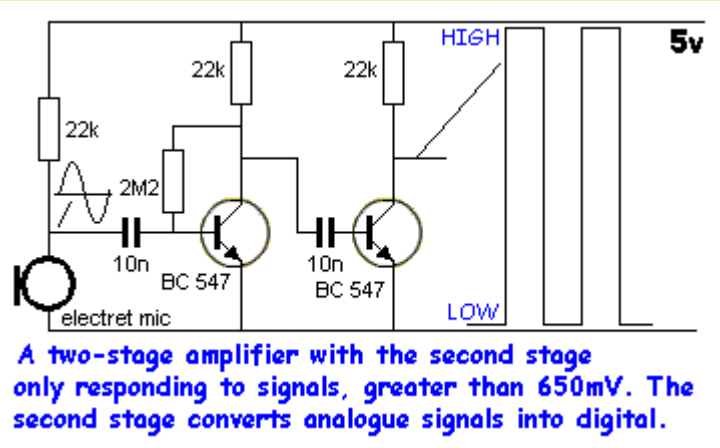

Fig 80e.

The second transistor in **Fig 80e** is called a DIGITAL STAGE. This simply means a biasing resistor is not connected to the base of the second transistor so it turns on fully when a signal greater than 650mV is detected and is turned off at other times. This stage is ideal for a micro or other Digital Stage as only two voltage levels are delivered. Either 0v or rail voltage (5v).The other advantage is it does not take any quiescent (idle) current.
This stage is only suitable if you are sure you have plenty of "over-voltage" to drive the transistor into saturation. By this we mean you must have at least 1v (1,000mV) drive signal so you can be sure the transistor will turn on (saturate).

The fast rise and fall times means you have a "clean" HIGH and LOW.

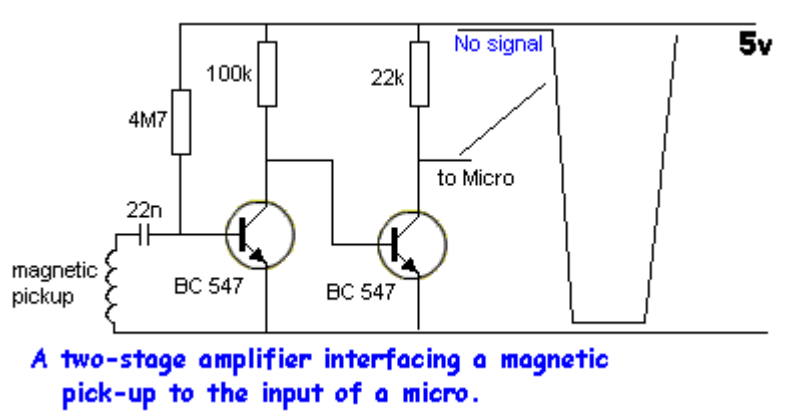

Fig 80f.

Fig 80f couples a magnetic pick-up to the amplifying circuit so the biasing of the first transistor can be determined by the value of the base-bias resistor. The coil cannot be connected directly to the transistor as the low impedance (resistance) of the coil will upset the bias on the base.

With this arrangement, the descending part of the input waveform of a few millivolts will turn off the transistor, while the ascending part of the waveform will not have any effect.
A coil of wire of any size will be suitable and to make it an effective collector of magnetic flux, it should have a magnetic core such as ferrite. No other impedance-matching is necessary.

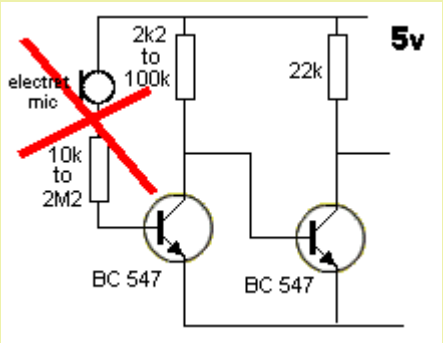

Fig 80g.

Fig 80g shows an electret microphone connected directly to the base of a two-transistor amplifier. This arrangement will work and provides the best transfer of signal from the microphone to the base. But biasing the first transistor is a very difficult thing to do. The electret microphone needs a very small current to operate and the series resistor allows this current to flow.
You will need to build the circuit, select values for the base and collector then whistle into the microphone to see which combination produces the highest gain.
If the resistor is a small value, the base current will be high and the transistor will be turned on fairly hard. This is called BOTTOMING and the collector voltage will be very low.

The electret microphone will produce a signal and this will increase and decrease the current into the base. But the reduced current will no turn the transistor off any appreciable amount and the signal will not appear on the collector. If the base resistor is very high, the electret microphone will not produce a very large output signal and again, the waveform on the collector will be very small.
There is no way anyone can predict the best values to use. It depends on the type of microphone, the gain of the transistor and the rail voltage. This is a very messy design and should be avoided. It has been included because it has been seen in circuits on the web.

LEVEL CONVERSION or LEVEL SHIFTING

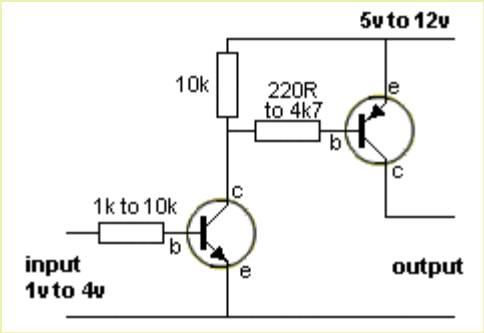

Suppose the output of a device is 3v and you want to activate a device that requires 5v or 12v.
This circuit converts the signal that rises from about 0v to about 4v to a signal that rises from 0v to 5v or 12v.
Note: The output is not inverted, it is in-phase with the input due to two inversions within the circuit.
The resistor values and the type if transistor will depend on the output current required.

LEVEL CONVERSION

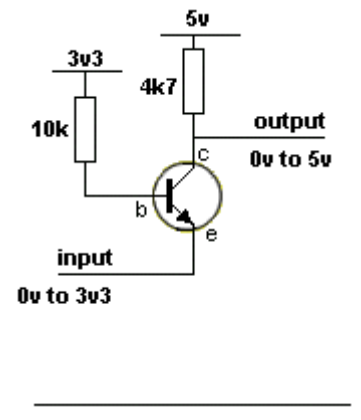

3v3 to 5v

3v3 to 5v:

When we talk about **LEVEL CONVERSION** we are only interested in **TWO STATES**. The zero state or LOW LEVEL and 3v3 (or 5v) or HIGH STATE (high level).
This circuit produces and output of 0v when the input is 0v and 5v output when the input is 3v3.
The circuit is not linear throughout the whole transition but that is not important for a DIGITAL to DIGITAL transfer. It is only the HIGH or LOW condition that is important.

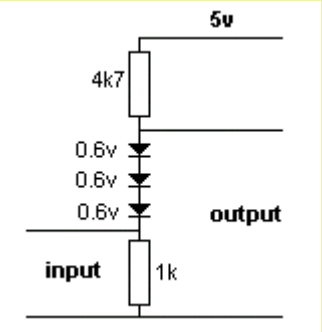

LEVEL CONVERSION with Diodes

3v3 to 5v with diodes:

Level conversion can be done with 3 diodes to change 3.3v to about 5v, but you have to know the current-capability of the 3.3v source and the current requirement of the 5v section. This arrangement is only suitable for very small current requirements.
The output is allowed to be taken HIGH by the input providing 3.3v and the 3 diodes providing 2.1v. This allows the 4k7 to pull HIGH with a very small current-capability.

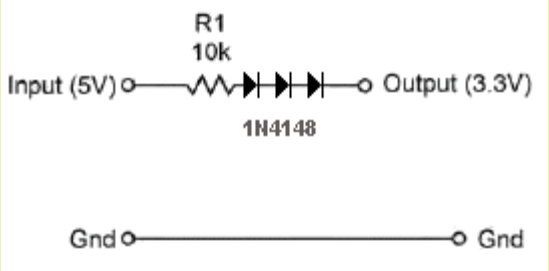

The 10k resistor is only a safety resistor and can be removed when the two sections are working correctly. When the 5v line is 0v, the output is 0v. When the 5v line is 5v, the output is about 3.2v.

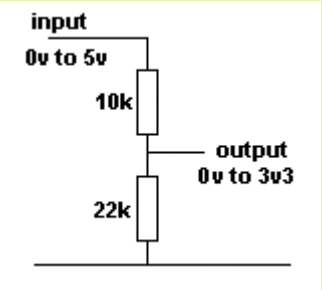

LEVEL CONVERSION with Resistors

5v to 3v3:

A 5v signal can be converted to 3v3 with two resistors called a **VOLTAGE DIVIDER**.
This circuit will work with both analogue and digital signals.

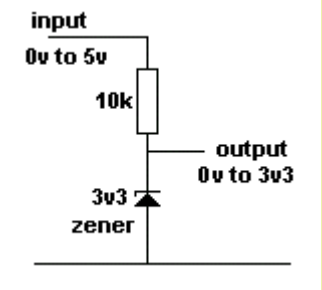

LEVEL CONVERSION with a Zener

5v to 3v3:

A 5v signal can be converted to 3v3 with a 3v3 zener.

See also LEVEL CONVERSION using an Inverter

OSCILLATORS

There are over 20 different types of oscillators and many more variations. We cannot cover them all - so we will concentrate on the most often-used and explain how they work.

Oscillators consist of one or two transistors. They start-up by one or more components in the circuit producing "noise" or a spike from the "mains" when the circuit is turned on. Some oscillators will not start-up if the supply is increased gradually. When a spike or noise is detected, the rest of the circuit amplifies it. In most cases the noise comes from the circuit being turned ON but it can also come from the noise generated within the junction of a transistor. This noise is random and of little use, but it is fed to components such as coils and capacitors as they have the ability to produce a waveform that rises and falls smoothly and this is amplified to produce the output.
When coils, crystals, capacitors and resistor are combined with transistors, many different effects and waveforms can be created and this all comes under the heading of OSCILLATORS. And the circuits are all amplifiers.
An amplifier can be turned into an oscillator by providing POSITIVE FEEDBACK.
The purpose of providing **NEGATIVE FEEDBACK** is to prevent oscillation.
The purpose of providing **POSITIVE FEEDBACK** is to create oscillation.
Positive feedback is when you take a point that is rising a **large amount** and pass it to a point that is also rising at the same time but only a **small amount**.
In other words, the feedback line must be able to **help** or **assist** the small-signal line. If it does not **assist** the small-signal line, NO oscillation will occur.
Some oscillators have a name - either after their inventor, by the way they are configured or by the shape of the wave. Some have 5 names. **Some have no particular name and are just called Feedback Oscillators (positive feedback).**

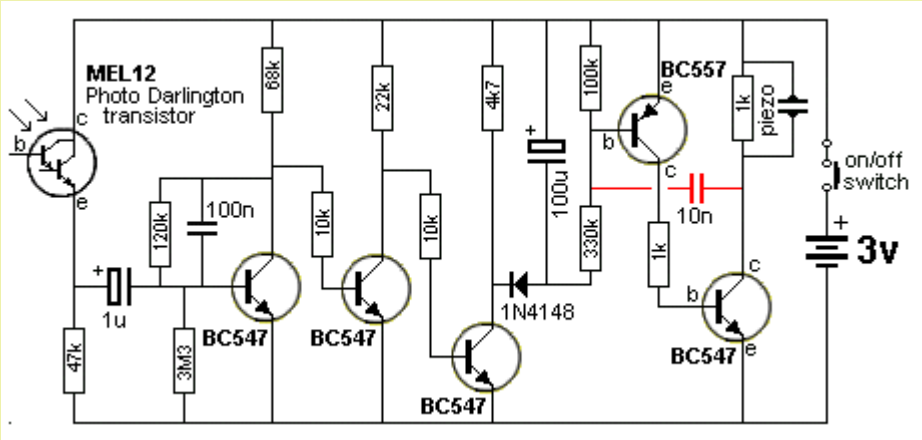

Fig 80. A Feedback Oscillator

Fig 80. The 10n capacitor provides the positive feedback to keep the circuit oscillating.

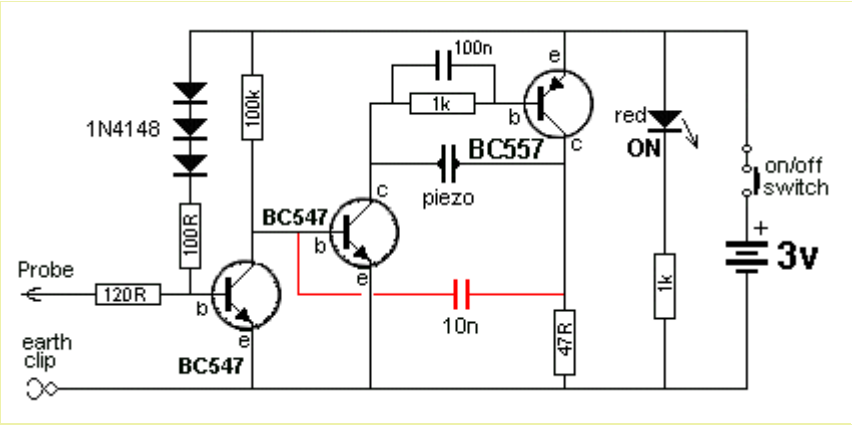

Fig 81. A feedback oscillator

Fig 81. The 10n capacitor provides the positive feedback to keep the circuit oscillating.

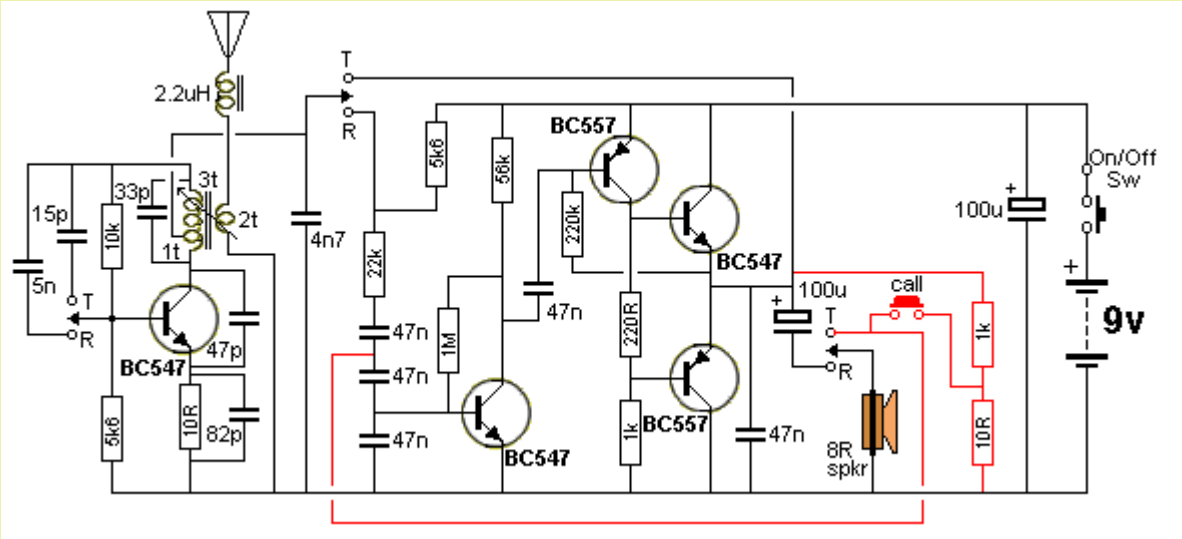

Fig 82. The positive feedback line creates the CALL tone

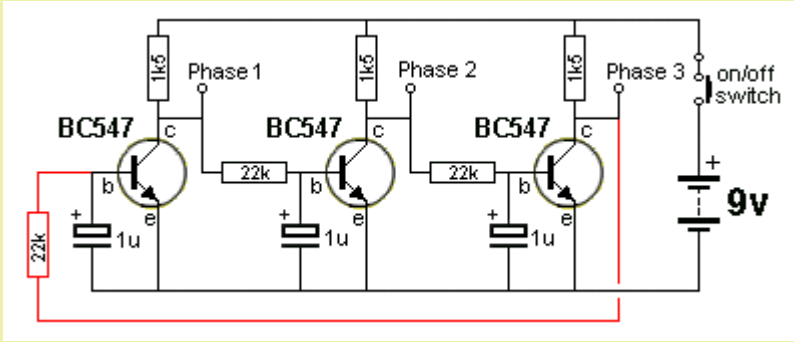

Fig 83.

Fig 83. When the third transistor is turning OFF, the collector voltage is rising and this is passed to the base of the first transistor, to turn it ON. This is how the circuit keeps "cycling" or oscillating.

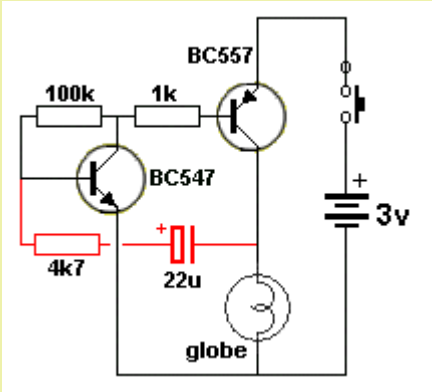

Fig 83a. Globe flashes at 1Hz

Fig 83a. The high-gain amplifier we studied in Fig 66, for example, has negative feedback to prevent oscillation.
By using positive feedback we can turn the high-gain amplifier into an oscillator.
This circuit is simply a high-gain amplifier with both transistors turning ON via the 1k and 100k resistors. This makes the voltage on the collector of the BC557 rise and the 22u and 4k7 passes this rise to the base of the BC547 to turn both transistors ON more and more until they are fully turned ON.
The 22u charges a little more and this reduces the current into the base of the BC547 to turn it off a little. This effect is passed to the collector of the BC557 and the two transistors start to turn OFF. When they are fully turned off, the cycle repeats by the transistors being turned on via the 1k and 100k.

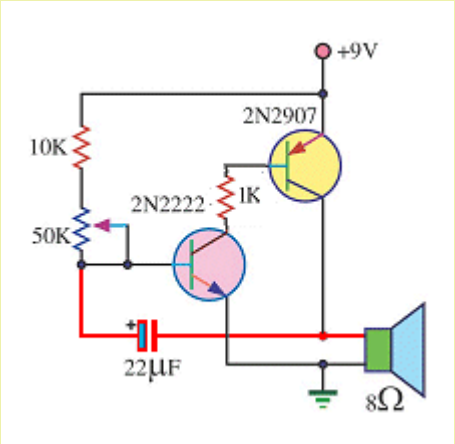

Fig 83aa. Simple Tone Oscillator

The 2-transistor amplifier we studied in Fig 42 can be changed slightly to drive a speaker. The two common-emitter transistors turn on together and the 22u is "lifted" to turn on the NPN transistor harder.
Both transistors turn on until fully saturated and this puts current though the speaker.
The 22u charges a little more and this reduces the current into the base of the NPN transistors, turning it off a slight amount. The PNP is turned off a small amount and they both keep turning off until fully turned off.
The 10k and 50k start to charge the 22u to repeat the cycle. The 22u produces positive feedback. It can be replaced by values from 100n to 22u to change the frequency of the tone.

The two circuits above are examples of **LOW IMPEDANCE** outputs. If the load (the globe or speaker) is increased above about 47 ohms, the circuit will not work. They simply "lock-ON." This is because the capacitor (electrolytic) must be pulled down by the load at a very critical point in the cycle. In addition, the 100k "turn-on" (or 50k and pot) resistor must be a very high value. If it is too low, the circuits will "lock-ON."
The critical point is this: When the circuit is fully turned-ON, the right side of the capacitor is near rail voltage and it is being charged via the bas-emitter junction of the first transistor. As it becomes fully charged, the current into the base of the first transistor reduces slightly and the transistor turns off slightly. This effect is passed to the second transistor and it turns off slightly too. The right lead of the capacitor drops and this lowers the left lead to turn off the first transistor slightly more. This is the beginning of the "turn-off section" of the cycle.
If the second transistor did not have a very heavy load (low resistance load), the slight turning-off of the two transistors would not lower the capacitor and they would both remain ON.

You can see the importance of FEEDBACK in a circuit. Some circuits will not work without feedback and some will distort. Sometimes the feedback is POSITIVE and sometimes NEGATIVE. The trick to understanding a circuit is to locate the feedback (component or "line") and work out what it is doing.

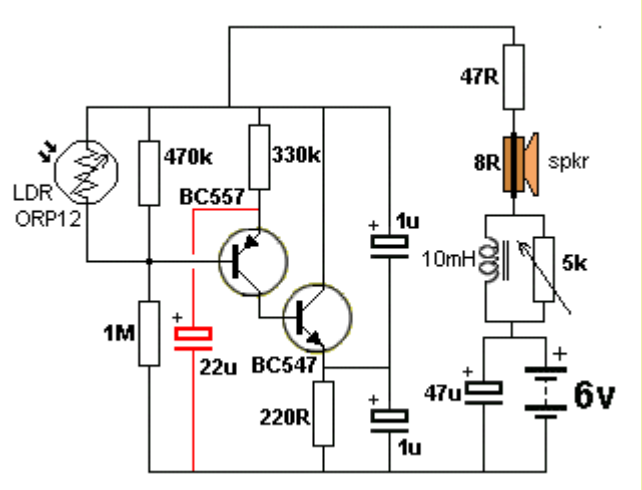

Fig 83b. Positive feedback comes from the 22u electrolytic.
This is a very unusual circuit.
Normally the feedback is obvious.

Fig 83b. Here's an oscillator circuit. We know it must have feedback to operate, but where is the feedback?
In this circuit the 4 electrolytics are equivalent to miniature rechargeable batteries.
When the circuit is turned on, they all get charged to a voltage according to the surrounding components but the 22u is the important component. The base of the BC557 sits at 4v and the emitter must rise to 4.6v for the PNP transistor to turn on. When it does, it turns on the BC547 and this transistor puts a load of 220R across the circuit. This reduces the voltage across the 470k/1M voltage divider and the base if the BC557 sees a lower voltage. During this time the 22u is acting as a miniature supply and maintaining the voltage of 4.6v on the emitter.
The BC547 turns ON more and more and even though the voltage on the 22u drops, the circuit turns ON and this takes more current from the 6v battery and produces a click in the speaker.

THE SQUARE-WAVE OSCILLATOR

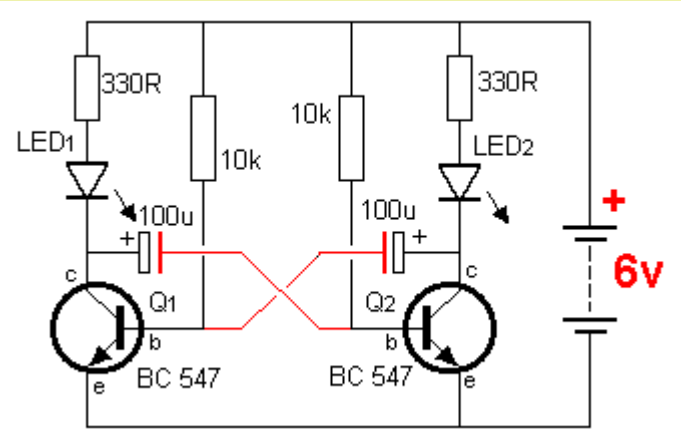

Fig 84.

When two transistors are cross-coupled as shown in **Fig 84**, you can safely assume the circuit will oscillate. The frequency of oscillation will depend on the value of the components but the oscillator is known as a **FREE-RUNNING OSCILLATOR** or **ASTABLE** (ay-stable) **MULTIVIBRATOR** and the output is a square wave. It will have an equal-mark-space ratio if the components are the same value.
This circuit is also called a **FLIP-FLOP**.

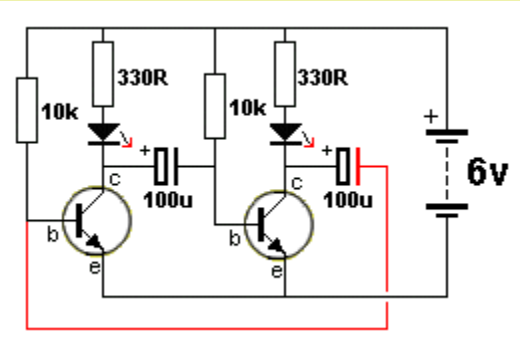

Fig 85.

Fig 85. By rearranging the components in Fig 84, we can draw the circuit as one common-emitter stage driving another common-emitter stage with a 100u providing positive feedback.
The circuit relies on the power being turned on quickly for it to start up. Both transistors will turn ON but one will turn on faster than the other and prevent the other turning on.
The 100u connected to the turned-on transistor will start to charge in the opposite direction and the second transistor will start to turn ON. This will pull the 100u lower the first transistor will start to turn OFF. This will continue until both transistors have changed states.

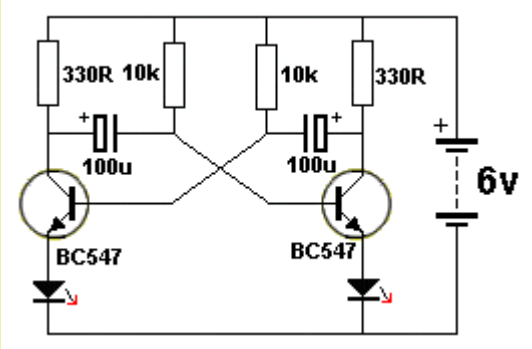

Fig 86.

Fig 86. Here is the **ASTABLE MULTIVIBRATOR** with the LEDs in the emitters instead of collectors (as is normal). The frequency of oscillation is approximately 1 second. The 330 ohm resistors set the LED current to 12mA for a 6v supply.

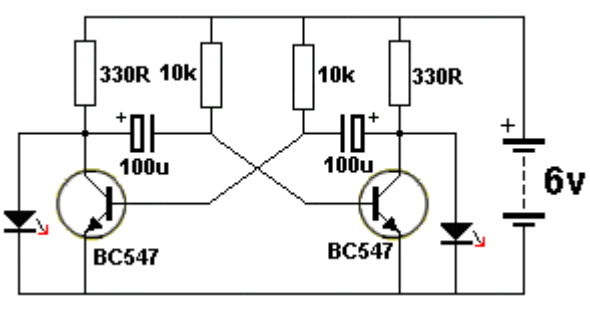

Fig 86a.

Fig 86a. The LEDs can also be connected as shown in this circuit. However the circuit takes more current than the previous designs. In the previous designs, one side of the circuit is taking current and illuminating the LED while the other side is turned OFF ("cut-off").
In Fig 86a, the "off" transistor is illuminating a LED while the "on" transistor is drawing current though a 330R resistor. Both sides are drawing current! This is a POOR DESIGN.

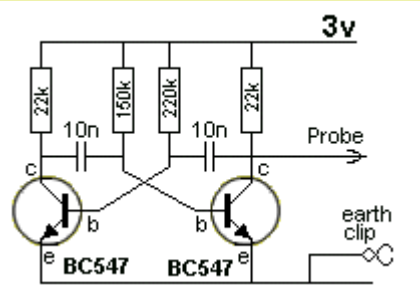

Fig 87.

Fig 87. The **ASTABLE** ("ay" - meaning not-stable) **MULTIVIBRATOR** circuit is rich in harmonics and is ideal for testing amplifier circuits. To find a fault in an amplifier, connect the earth clip to the 0v rail and move through each stage, starting at the speaker. An increase in volume should be heard at each preceding stage. This Injector will also go through the IF stages of radios and FM sound sections in TV's.

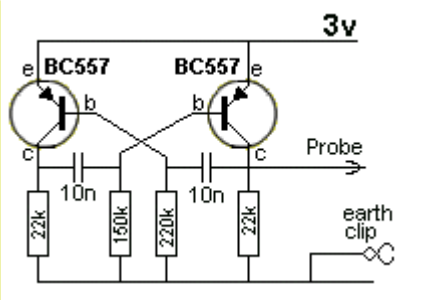

Fig 88.

Fig 88. The astable multivibrator can be made with PNP transistors.

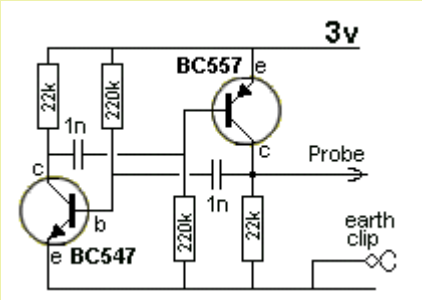

Fig 89.

Fig 89. A circuit can be made with one NPN and one PNP transistor. It ceases to be a FLIP FLOP or Multivibrator as both transistor turn on at the same time and the circuit becomes a **Relaxation Oscillator**.

THE SINE-WAVE OSCILLATOR - also called the PHASE-SHIFT OSCILLATOR

A Sine-wave Oscillator can be made with a single transistor.

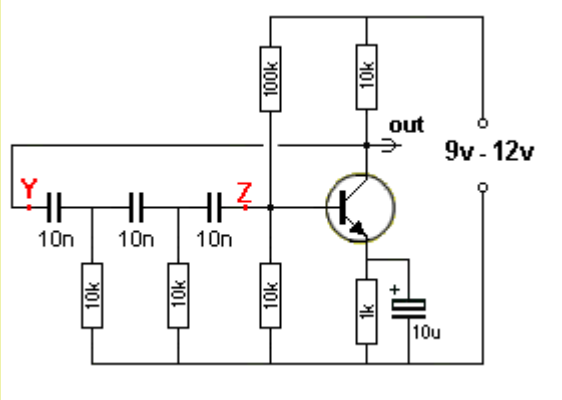

Fig 90. The Sinewave Oscillator

Fig 90. This circuit produces a sinewave very nearly equal to rail voltage.
The important feature is the need for the emitter resistor and 10u bypass electrolytic. It is a most-important feature of the circuit. It provides reliable start-up and guaranteed operation. For 6v operation, the 100k is reduced to 47k.
The three 10n capacitors and two 10k resistors (actually 3) determine the frequency of operation (700Hz).
The 100k and 10k base-bias resistors can be replaced with 2M2 between base and collector.
This type of circuit can be designed to operate from about 10Hz to about 200kHz.

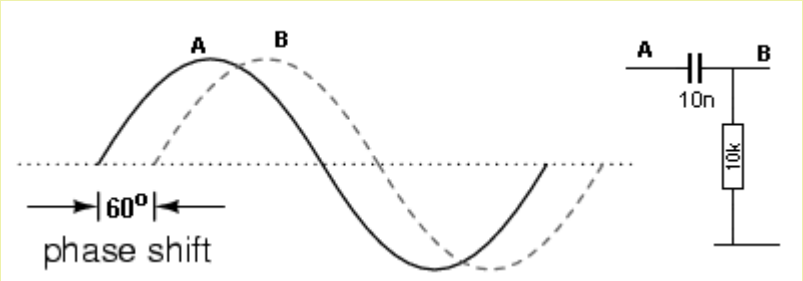

Fig 91.

Fig 91. The phase-shift oscillator has 3 "sections" made up of a 10n capacitor and 10k resistor. This "section" is shown above and each "section" produces a delay or "phase-shift" of about 60° but the total must be 180°. The base and collector of a common-emitter stage are 180° out-of-phase, so the signal entering the base is 360° (IN-PHASE with the output). This creates POSITIVE FEEDBACK. This concept is very hard to understand so we need to explain it in simple terms.
Points Y and Z are the ends of a long piece of rope and the three resistors are weights tied to the rope.
You shake the rope up and down at Y and Z moves up and down at a later time in the cycle. You know this because you can make a wave travel down a rope. Exactly the same thing happens with a signal that enters at Y. It takes time for the peak to reach Z.
Now consider the circuit at switch-on. The caps are uncharged and the 10k collector resistor pulls the three capacitors high. Taking into account the voltage-dividing effect of the three lower 10k resistors, the collector is possibly at about 2v. The three 10k resistors start to charge the three 10n caps and the voltage on the base falls. This makes the collector voltage rise. This continues until the collector cannot rise any further and the capacitors continue to charge and the voltage on the base drops. The 100k base resistor takes over and starts to discharge the 3rd capacitor and turn the circuit on. The collector voltage drops and the energy in the three capacitors get passed into the base to fully turn the transistor ON.
This all happens in a "sliding motion" that produces a sweeping output called a SINEWAVE. It is a very "delicate" oscillator and any change to the LOAD (10k) may stop its oscillation.

How to read the Graph: Get a ruler and hold it "up and down" on the page (or on the screen) so you view the right-hand edge of the ruler and can only see the word "phase" and "60° " Now slide the ruler to the right and you will see the graph "A" gradually rising. Keep moving the ruler to the right and you will see graph "B" gradually rising.
This is how you "interpret" the graph and see how graph "B" lags (is behind) graph "A." If you don't read the graph correctly, it looks like graph "B" is in front of graph "A" - but this is not the case.

HOW THE CIRCUIT WORKS

When the power is applied to the circuit the transistor will immediately turn on FULLY as the three 10n capacitors will acts as "short-circuits" and current will pass to the base and the collector voltage will fall to a very LOW level.
The capacitors will gradually charge via the 10k resistors and the voltage across the second 10k resistor will drop (due to the charging current into the middle 10n gradually reducing) and the voltage on the left lead of the 3rd 10n will drop. This will reduce the voltage on the right lead of the 10n and turn the transistor OFF. The first two 10n's will start to charge but the voltage across the 2nd 10k will be very small and the 3rd 10n will start to charge via the 100k resistor.
The charging of the first 10n is much faster than the charging of the third 10n and the voltage on the output rises to almost rail voltage. This allows the 3rd 10n to charge at a faster rate and just when the collector voltage reaches a maximum, the base voltage reaches 0.6v and the transistor starts to turn ON.
This lowers the collector voltage but the transistor still keeps turning ON via the 100k and the three 10n start to charge. This action increases the "turn-ON" of the transistor and it continues to turn-ON until the voltage on the collector reaches a very LOW level.
The circuit works completely differently to anything described in any Text Book. The transistor operates on a rising and falling CURRENT (increasing and decreasing current) into the base. That's why no-one has described it before.
The third 10n continues to charge and the "turn-ON" current for the transistor reduces and it starts to turn OFF a slight amount. The second 10k continues to charge the middle 10n and the voltage across the 10k reduces. This pulls the left lead of the third 10n towards the 0v rail and the right lead follows. This action turns OFF the transistor and the collector voltage rises.

REALITY

Once you see how the circuit **REALLY WORKS**, it has nothing to do with 60° phase shift for each

section between **X** and **Y**. No-one has actually sat down and worked out how the circuit works and they just copy mistakes from others. The overall DELAY produces a signal that ASSISTS in keeping the circuit oscillating, but the feedback signal is not a simple sinewave.
It's possibly NOT important how the circuit works, but when you have trouble seeing how a 10n and 10k can produce a **60° phase shift,** you have to look into the circuit and satisfy yourself.
You cannot possibly expect to fault-find a circuit if you don't have an understanding of how it works.
Things you will learn in one circuit can be applied to another circuit and this is how you progress.
That's why the operation of this circuit ahs been provided and is completely different to anything that you would have considered.

THE TWIN-T OSCILLATOR

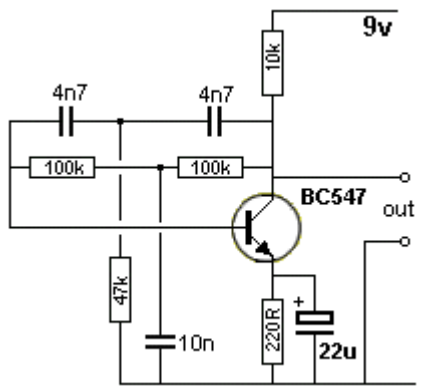

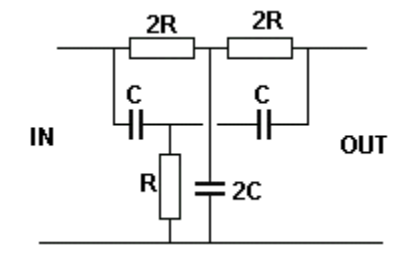

The basic twin "T" filter is a passive notch filter composed of two T-networks, with maximum attenuation occurring at

fnotch = 1/(2πRC)

One of these T networks has one resistor and two capacitors, while the other has two resistors and one capacitor. At the notch frequency fnotch of the twin-T filter, the total phase shift is zero, which satisfies the requirement for oscillation. This is why the circuit generates a sine wave with a frequency equal to fnotch = 1/(2πRC).

Here's how the circuit works:
The transistor is turned ON because the base is connected to the collector via the two 100k resistors. But any signal (such as a voltage) coming from the collector will turn the transistor OFF. So a rising signal has to be delayed to arrive at the correct time to make the transistor oscillate.
There are two other factors that make the circuit work. The first is the 4n7, 47k and 4n7. Any frequency on the collector will pass through the two 4n7 capacitors and the 47k will be a "load." As the frequency on the collector increases, more of the signal will pass through the "T" network and appear on the base.

This means the top "T" network allows the high frequencies to pass to the base.
The 100k, 10n, 100k allows the low frequencies to pass to the base. This is because the "resistance" of the 10n becomes less for a high frequency and it acts a "load" to attenuate the signal.
We have two separate circuits and when the frequency at the collector increases, the lower circuit reduces the signal. When the frequency decreases, the top circuit does not pass the full amplitude.
There is a frequency where the amplitude of the feedback-signal is the greatest and this is the frequency at which the circuit operates.
Finally we have a situation where the "feedback signal" is delayed by 180° by the capacitor-resistor networks and this means it assists in making the transistor oscillate.
This circuit is not easy to design and is not a good performer. It will stop oscillating if the output signal is passed to a circuit that reduces the amplitude.
The **Phase-Shift Oscillator** is much more reliable.

The circuit below consists of two "twin-T" oscillators set to a point below oscillation. Touching a Touch Pad will set the circuit into oscillation.
Different effects are produced by touching the pads in different ways and a whole range of effects are available.
The two 25k pots are adjusted to a point just before oscillation.
A "drum roll" can be produced by shifting a finger rapidly across adjacent ground and drum pads

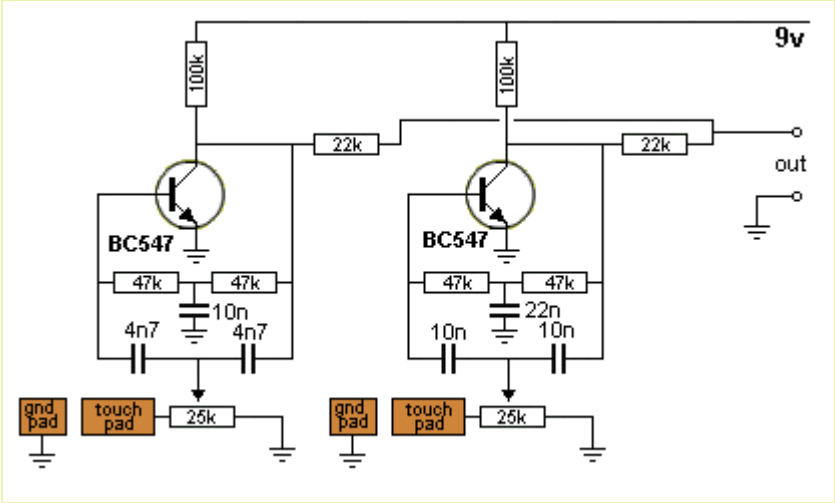

THE BLOCKING OSCILLATOR

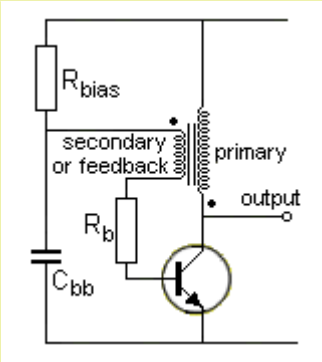

Fig 92.

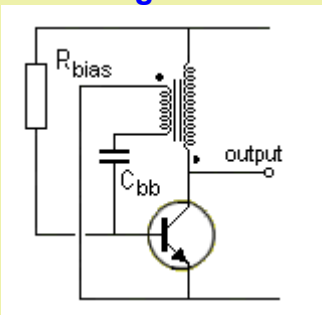

Fig 92a.

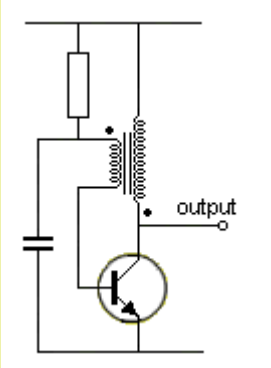

Fig 92b.

Fig 92. The BLOCKING OSCILLATOR circuit uses a transformer to produce POSITIVE FEEDBACK to the base.
The circuit starts by Rbias charging Cbb to deliver voltage to the base of the transistor via Rb (and also a small current). The transistor turns on and produces expanding magnetic flux in the primary of the transformer. This flux cuts the turns of the secondary (or feedback) winding and increases the base voltage and CURRENT. The voltage out of the top of the secondary winding is prevented from "disappearing" by Cbb.
The transistor keeps turning ON until it cannot turn on any more. At this point, the current through the primary is a maximum but it is not expanding flux and its effect is not passed to the secondary winding. The base-current reduces enormously to the very small Rbias current and the transistor turns off abruptly (it takes a high base current to maintain a high collector current and the base current is very small). The heavy current through the primary is producing a very strong flux and it collapses, producing a voltage in both windings of opposite polarity and very high amplitude.

Fig 92a shows the base being "capacitor injected." This saves one resistor and can produce a higher output. All the values and the transformer needs adjusting for the performance required. The start of each winding is shown with a dot. This assumes the windings are wound in the same direction.

Figs 92b,c shows alternative ways to produce a blocking oscillator. The difficulty with producing a Blocking Oscillator is getting a suitable transformer.

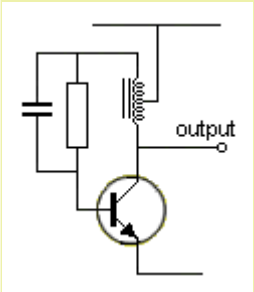

Fig 92c

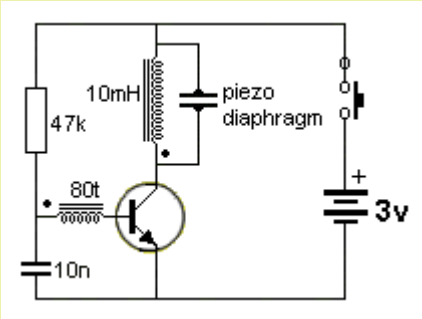

Fig 93.

Fig 93. A simple **BLOCKING OSCILLATOR** circuit can be made with a 10mH inductor and 80 turns of very fine wire wound on top.
The piezo diaphragm reacts to the very high "FLYBACK VOLTAGE" produced by the primary when the transistor turns off. This type of circuit is often used to produce very high voltages.

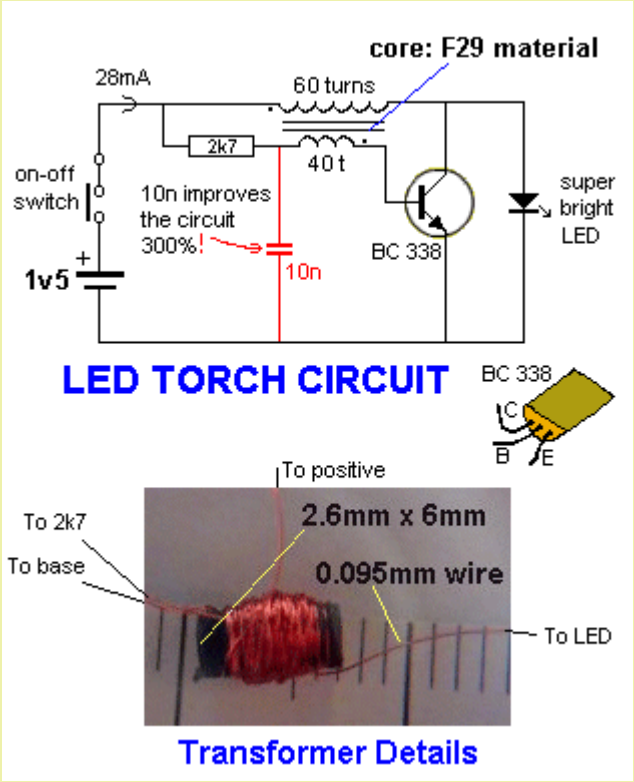

Fig 94.

Fig 94. This LED Torch circuit uses the "flyback" voltage of a BLOCKING OSCILLATOR to illuminate a 3.6v super-bright LED from a 1.5v supply.
Note: the 10n capacitor prevents the energy from the feedback winding being lost. All the energy from the feedback goes into the base of the transistor to turn it on hard.

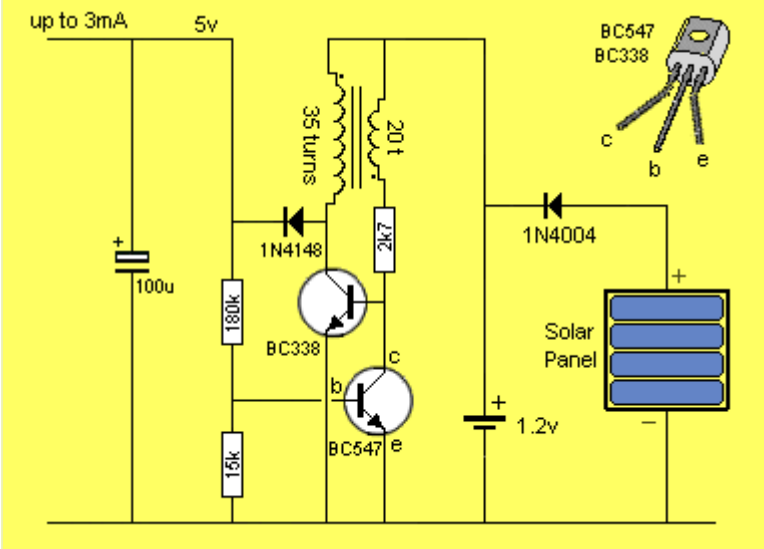

Fig 95.

Fig 95 shows a Blocking Oscillator producing a regulated 5v from a 1.2v supply.

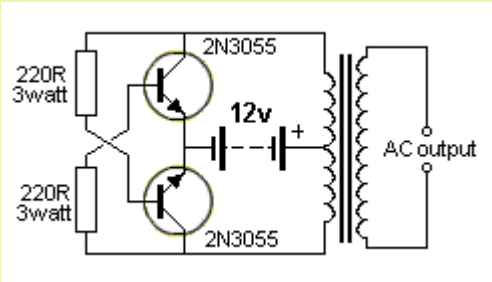

Fig 96. 2-transistors in PUSH-PULL - as a Blocking Oscillator circuit

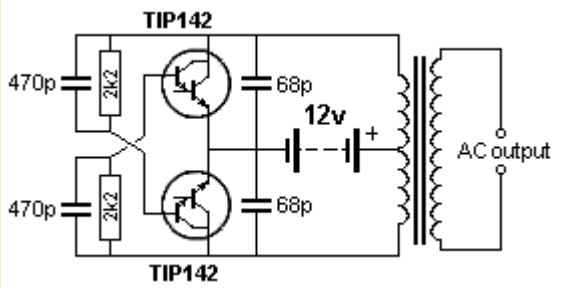

Fig 96a.

Fig 96. A simple extension of the Blocking Oscillator in Fig 92c above, is shown in this diagram. It consists of two **BLOCKING OSCILLATOR** transistors that are turning each other off. The circuit starts by one transistor being slightly faster than the other. It turns ON and produces magnetic flux that cuts the turns of the other half of the primary winding to increase the voltage from the battery and at the same time it reduces the voltage to the base of the other transistor - because the transistor allows only a very small voltage to appear across the collector-emitter terminals when it is turning ON. It keeps turning on until it is fully ON.
At this point the flux is no longer expanding and the generated voltage in the winding that supplies the base voltage (and current) ceases. This turns it off a small amount and the magnetic flux starts to collapse and produce voltages in the opposite direction. The voltage (and current) to the base is less than before and this turns the transistor off more. The voltage to the base of the other transistor starts to rise and that transistor takes over. The two transistors operate in PUSH-PULL mode.

To reduce the wasted power in the 220R resistors, Fig 96a uses Darlington transistors and 2k2 0.5watt resistors. The circuit is used to drive a CFL lamp from a 12v battery.

The difficulty with producing a Blocking Oscillator is getting a suitable transformer. A similar "flyback voltage" can be obtained from an inductor. This will need an oscillator made up of two transistors to drive the inductor.

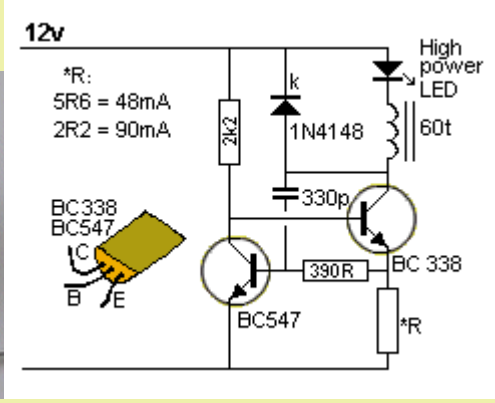

Fig 97.

Fig 97. This circuit is a "Buck Converter" meaning the supply is greater than the voltage of the LED. It will drive one high-power white LED from a 12v supply and is capable of delivering 48mA when R = 5R6 or 90mA when R = 2R2. The LED is much brighter when using this circuit, compared with a series resistor delivering the same current.
But changing R from 5R6 to 2R2 does not double the brightness. It only increases it a small amount. The inductor consists of 60 turns of 0.25mm wire, on a 15mm length of ferrite rod, 10mm diameter. Frequency of operation: approx 1MHz. This circuit draws the maximum current for a BC 338.
When the circuit is turned on the 330p gets charged. This turns on the BC547 and keeps the BC338 off. When the 330p is charged the BC547 is not turned on as much and the 2k2 can start to turn on the BC338. It pushes the charge on the 330p into the base of the BC547 to keep it off. The 330p gets discharged by the 330R and the voltage across the *R resistor turns on the BC547 to turn off the BC338. The 1N4148 absorbs the high-voltage flyback pulse. The circuit is only active for a very short period of time and off for a longer period of time. This delivers a small amount of energy to the high powered LED and allows the LED to be connected to a 12v supply (via the circuitry).

THE FLYBACK OSCILLATOR

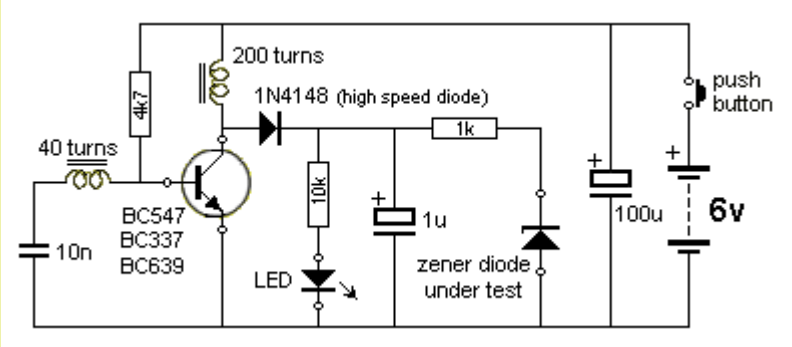

Fig 97a

A flyback oscillator is any oscillator where the transistor turns off quickly and abruptly during part of the cycle and allows the energy (the flux) in an inductor to collapse suddenly to produce a high voltage IN THE OPPOSITE DIRECTION. The circuit in **Fig 97a** consists of a transformer with a feedback winding of 40 turns. It can be constructed as a piece of test equipment to test transistors, zeners and LEDs.

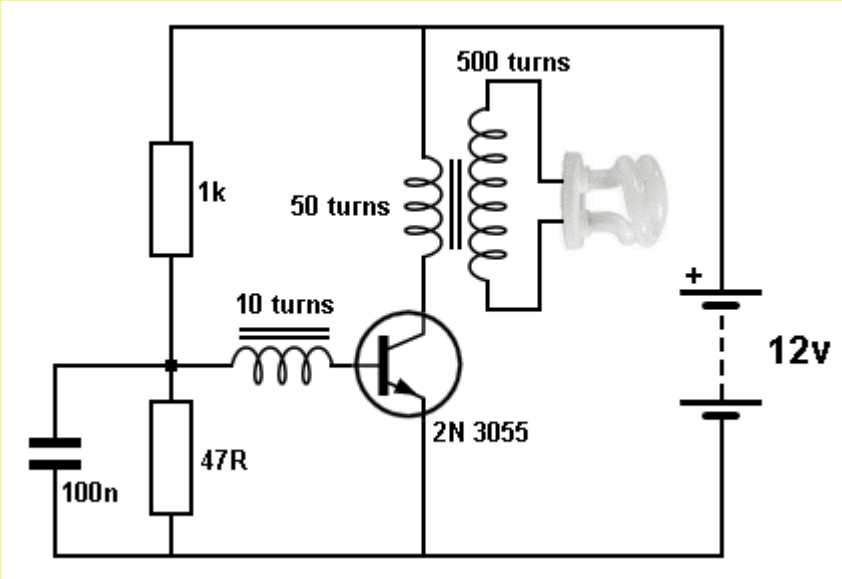

Fig 97a-aa

FLYBACK OSCILLATOR

This circuit is a very good example of a flyback transformer in operation.
The CFL needs a very high voltage to strike (start the illumination) when the anodes (all projections into a glass tube are called anodes) are not heated.
You cannot use the "turns-ratio" (50:500 in this case) to determine the output voltage because the transformer is used in its "collapsing mode."

Fig 97a-ab

This circuit will drive a 5watt CFL tube from an old CFL lamp from 6v or 12v. It makes a very handy emergency light.
The transformer is made by winding 500 turns for the secondary.
This consists of winding about 10 turns on top of each other before advancing along the rod. The rod can be round or flat, from an old AM radio. It is called a ferrite rod. The 500 turns have to be added before reaching the end and this means 100 turns has to take up 1/5th of the distance. This reduces the voltage between the turns as the enamel will only withstand 100 volts.
Before you start winding, use at least 3 layers of “sticky-tape” to prevent the high voltage shorting to the rod.
The size of the wire is not important and anything 0.25mm or thinner will be suitable. After winding the secondary, the primary is 50 turns and the feedback is 10 turns.
The primary can be 0.5mm wire and the feedback 0.25mm.
Connect the transistor, components and tube and turn the circuit ON very briefly. If the tube does not illuminate immediately, reverse the wires to the feedback winding.
The transistor must be 2N 3055 (or the plastic version, TIP 3055). It will get warm when illuminating the lamp and needs to be heatsinked. The lamp must not be removed as the circuit will overload and damage the transistor.
The circuit takes 250mA when driving a 5 watt CFL (or 18 watt fluorescent tube) on 12v supply. The 1k base resistor can be reduced to 820R and the brightness will increase slightly but the current will increase to 500mA.
The circuit is more-efficient on 6v. The 1k base resistor is reduced to 220R and the transistor remains cool.

THE BOOST CIRCUIT or BOOST CONVERTER

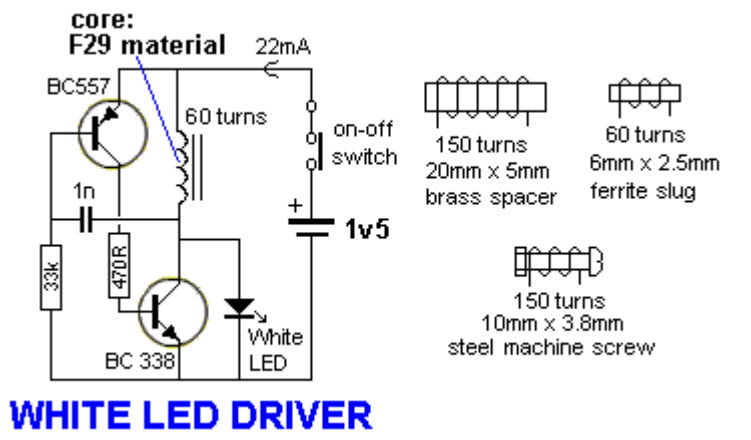

Fig 97aa

Any circuit that converts a low voltage to a higher voltage is classified as a **BOOST CONVERTER** or **BOOST CIRCUIT**.
Fig 97aa will drive a super-bright white LED from a 1.5v cell.
The 60 turn inductor is wound on a small ferrite slug 2.6mm dia and 6mm long with 0.25mm wire.
The main difference between this circuit and the two circuits above is the use of a single winding and the feedback to produce oscillation comes from a 1n capacitor driving a high gain amplifier made up of two transistors.
The feedback is actually positive feedback via the 1n and this turns on the two transistors more and more until finally they are fully turned on and no more feedback signal is passed though the 1n. At this point they start to turn off and the signal through the 1n turns them off more and more until they are fully turned off. The 33k turns on the BC557 to start the cycle again.

THE BUCK CONVERTER

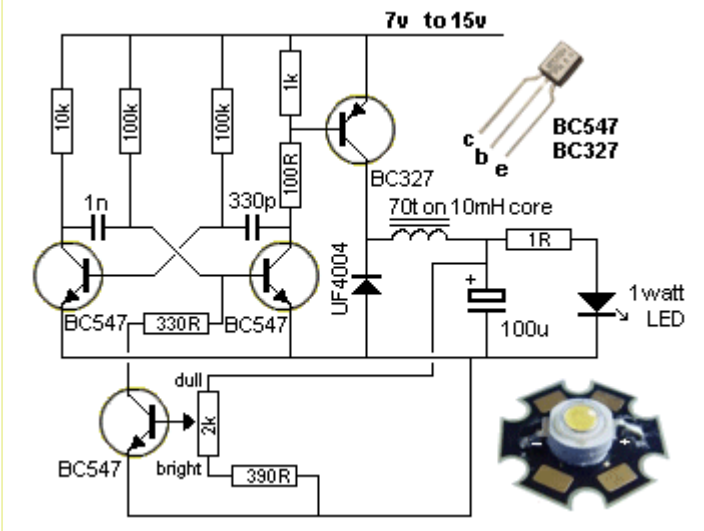

Fig 97b

Any circuit that converts a high voltage to a lower voltage is classified as a **BUCK CONVERTER**.
Fig 97b will drive a 1watt white LED from a 12v supply and is capable of delivering 300mA. The driver transistor is BD 327 and the inductor is 70 turns of 0.25mm wire wound on the core of a 10mH inductor. The voltage across the LED is approx 3.3v - 3.5v The 1R is used to measure the mV across it. 300mV equals 300mA LED current.
The diode MUST be high speed. A non-high-speed diode increases current 50mA.
This circuit is a very good design as it does not put peaks of current though the LED.

MORE OSCILLATORS

The Armstrong, Clapp, Colpitts, Hartley, Wien Bridge and even unknown oscillators like the one below all use capacitors, resistors and coils to create a circuit called a RESONANT CIRCUIT and these two components produce a sinewave when they receive a pulse of energy.

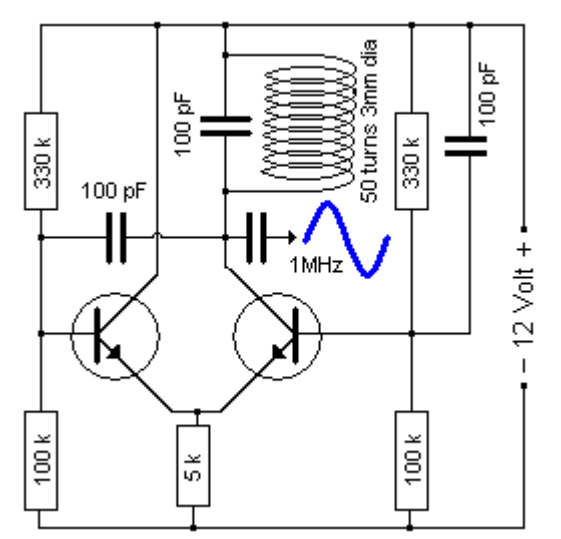

Fig 98.

We are going to lump all these oscillators together as they are variations on a similar design. There are two common oscillators that can be recognised by the layout of the circuit. The Colpitts oscillator has 2 capacitors across the coil with the signal taken from the join or it may have a tuned circuit with the signal taken from the active end. The Hartley Oscillator has a tapped coil and these are difficult to obtain.

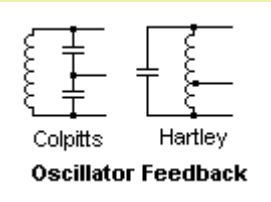

Fig 99.

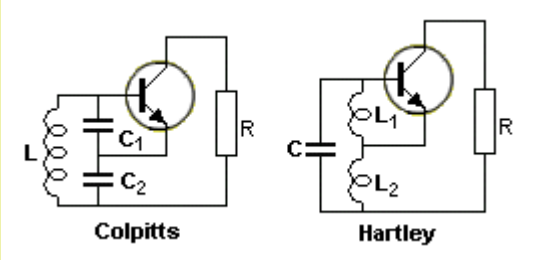

Fig 99a

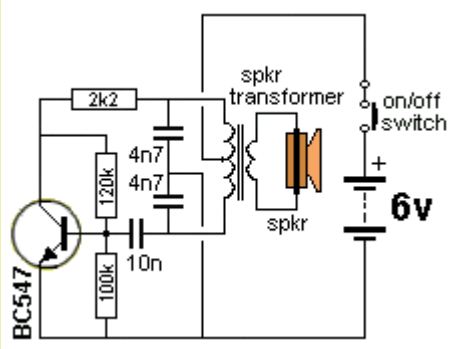

Fig 100. Colpitts Oscillator

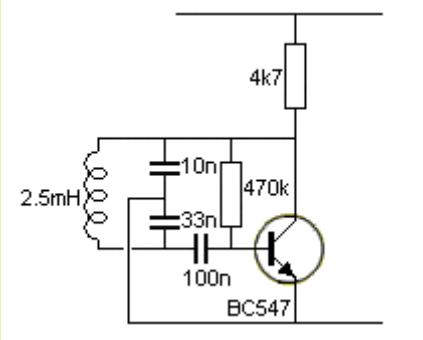

Fig 101. Colpitts Oscillator

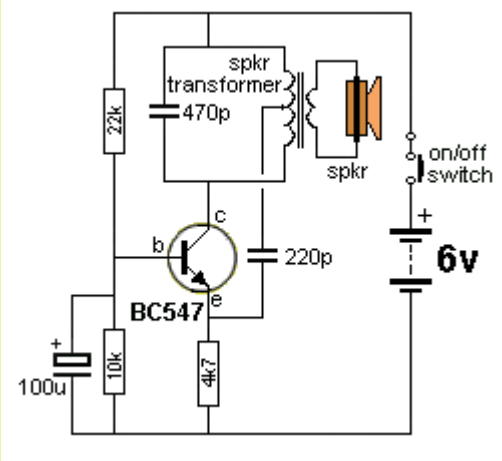

Fig 102. Hartley Oscillator

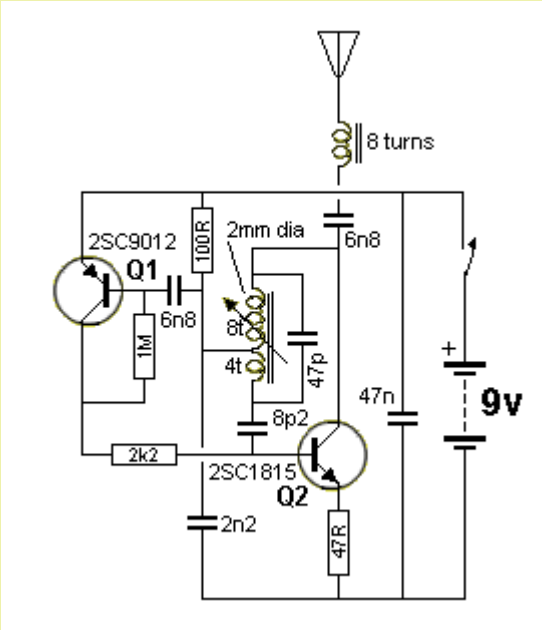

Fig 103. Hartley Oscillator

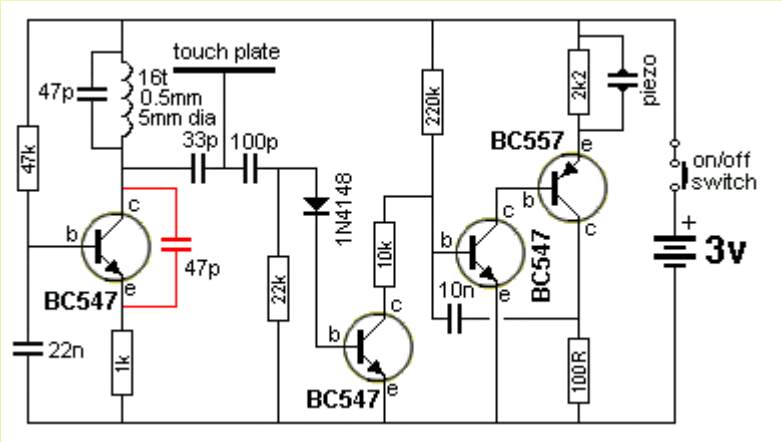

Fig 103a. Door Knob Alarm

DOOR-KNOB ALARM

This circuit can be used to detect when someone touches the handle of a door. A loop of bare wire is connected to the point "touch plate" and the project is hung on the door-knob. Anyone touching the metal door-knob will kill the pulses going to the second transistor and it will turn off. This will activate the "high-gain" amplifier/oscillator.

The circuit will also work as a "Touch Plate" as it does not rely on mains hum, as many other circuits do.

The first transistor is a **Colpitts Oscillator** and the feedback is via the 47p. Explaining the operation of this oscillator could take a page of discussion. We are only going to explain one amazing feature - how the oscillator creates the second half of its cycle. We know how the stage turns on (via the base-bias resistor) - but how does it turn OFF to create the other half of the waveform. Here's how:

We know that when a transistor turns ON, the collector voltage falls and the emitter voltage rises. Simply joining these two points with a resistor or capacitor will not produce feedback as one is falling and the other is rising. We need to join two points that are rising AT THE SAME TIME.

The secret comes from the inductor. The 16 turns of wire produces a voltage in the opposite direction when the transistor is turned off.

In the first diagram of fig 103b we see the transistor turned ON and current flows through the coil. The voltage at the bottom of the coil will be slightly lower than the supply voltage. When the transistor is turned off, it is effectively out of the circuit and the current flowing through the coil produces magnetic flux that will collapse very quickly and produce a voltage across the ends of the coil that will be OPPOSITE to the applied voltage. This means the voltage at the bottom of the coil will be HIGHER than rail voltage and we can think of the coil rising above the power rail and producing a voltage 2, 5, 10 or even 100 times higher than the power-rail voltage.

This is the amazing fact about a coil (inductor) and is the secret behind the operation of this circuit.

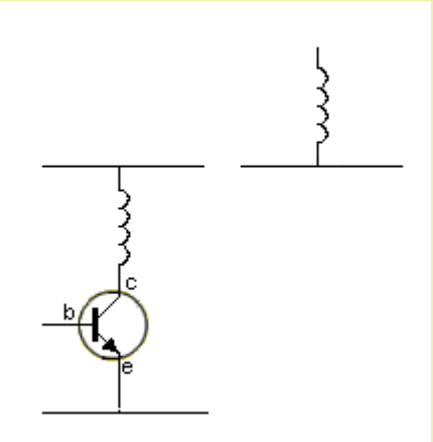

Fig 103b.

In circuit 103b, this high voltage is produced at some point in the cycle and it pulls the emitter UP a small amount via the 47p and this turns the transistor OFF. We are not going into what part of the cycle produces the high voltage via the inductor but it DOES. That's how the circuit produces the second part of its cycle. The inductor produces a high voltage that starts to turn off the transistor and this allows the inductor to produce a higher voltage and the transistor is turned off even more. During this time the 47p feedback capacitor is charging and RISING.
Most oscillators are described on the web and you can decide which type you need for your particular application.

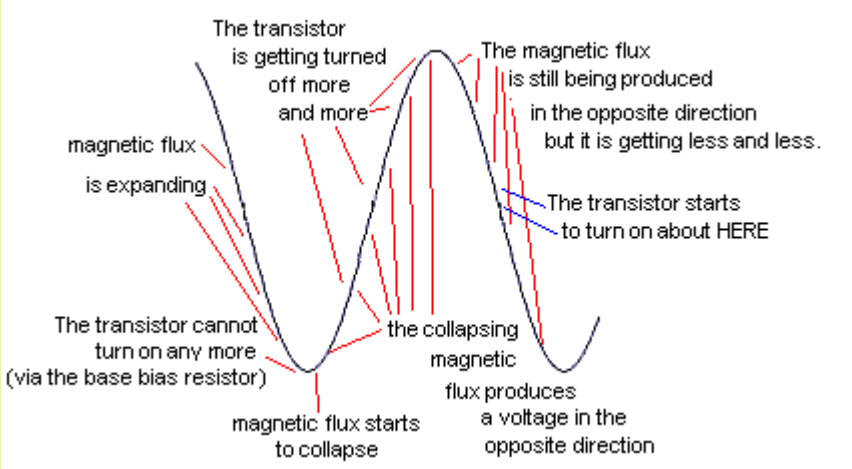

Fig 103c.

THE FEEDBACK CAPACITOR

The author was asked how to work out the value of the feedback capacitor in an oscillator.
There are many different oscillator circuits and in some oscillators, the feedback capacitor sets the frequency of operation for the circuit.
Rather than trying to work out the value mathematically, it is best to refer to a circuit that is already operational and copy the value. You will be able to increase or decrease the value 30% to get your required frequency but any value less than 50% may not produce enough feedback to keep the circuit oscillating.
You may need to increase the base-bias on the transistor to give the transistor more gain.
In some oscillator circuits, the feedback capacitor does not set the frequency. It is determined by a capacitor and coil in a TANK CIRCUIT.
The same suggestion applies. Refer to a circuit that already operates at the frequency you require and use the same value capacitor.
You can halve the value and double the value and use a number of different transistors to make sure the circuit still operates.
This proves the value you have selected is not at the extreme limit of operation.

OSCILLATOR SUMMARY

Look for a TUNED CIRCUIT and feedback line. It will be an oscillator.
Most have a high-impedance output and must be connected to a circuit that will not "load" them (and reduce the amplitude of the output) or prevent them oscillating. But some oscillators have a very low output impedance and can drive a low-impedance device. You have to be aware of these features.

HOW AN OSCILLATOR STARTS

All oscillators start-up due to noise. In most cases this noise comes from a spike or peak of current that occurs when the circuit is turned ON.
That's why some oscillators will not start if the voltage gradually rises. Uncharged capacitors present a very small resistance and allow a high current to flow (relatively speaking) to other components and this starts the circuit operating.
In addition we have the situation where a transistor produces a small amount of noise in the base-emitter junction when a current flows through the junction. This noise gets amplified by the transistor and appears on the collector.
Other circuits rely on the transfer of the spike from the collector to the base due to the capacitor being uncharged.
Some circuit rely on the fact that a tuned circuit starts to produce a waveform when it receives a spike of energy and this waveform is amplified by the transistor.
Other circuits rely on the waveform produced by a crystal when it receives a spike of energy.
Some oscillators are very reliable as self-starting, while others need the right voltage and very little loading on the output to be reliable.
You can test an oscillator by gradually increasing the voltage and see if it self-starts.
The starting waveforms can be so minute that you cannot detect them.

IMPEDANCE MATCHING

Every electronic component has a value of resistance. You can measure this value with a multimeter. But sometimes the value changes according to the light it receives, the frequency it is operating-at, or the voltage it is connected-to, or the sound it receives, or its temperature or many other influences.
Sometimes the output from a circuit might be 2v, but if you put a low-impedance device such as a speaker on the output, it "kills" the sound.
Or you may have a nearly flat 9v battery. It measures 5v with a multimeter but when you connect a 3v motor, it does not work.
These are both examples of poor IMPEDANCE MATCHING - yes, the battery has a HIGH Impedance and that's why it cannot deliver the current required by the motor.

What is **IMPEDANCE MATCHING**?

Impedance Matching is is connecting two items together so: "THEY WORK."

Some devices PRODUCE or DELIVER a signal or a voltage or a current.
Some devices ACCEPT a signal or voltage or current.
We need to connect these types of devices together.

Let's start with those that DELIVER:
An amplifier may be able to produce an output of 2v, but when a low-impedance device (low resistance device) such as a speaker is connected, it cannot deliver the CURRENT needed to drive the speaker. The same with a flat 9v battery. It cannot deliver the CURRENT needed to drive a 3v motor.
You cannot "test" or measure the output capability of a device. You must connect it to the input of the project you are designing and measure the waveform or voltage being delivered (or transferred).
If the voltage or waveform is considerably less than when it is not connected, you have decide if the attenuation (reduction) is acceptable. The ideal situation is NO attenuation - but in nearly all cases you will get some attenuation.

There are no "rules to follow" and every case is different. However when the output of a device is NOT reduced when it is connected to a circuit, the two items are said to be IMPEDANCE MATCHED.

There are three ways to "Match Impedances:"
1. via a resistor. This is generally a poor way to match impedances and is very inefficient. But it may be the only way to connect two devices.
2. via a capacitor. This can be a very good way to match impedances.
3. via a transformer. Generally the most efficient way to match impedances but requires a lot of calculation and expense in getting the transformer designed and manufactured.

Impedance Matching can also be referred to as "MATCHING" and the simplest example is

connecting a 6v globe to a 12v battery. This is called "Resistance Matching" or "Current Matching" or "Voltage Matching" because the resistance, voltage and current are known quantities.
[To connect a 6v globe to a 12v battery you can use a resistor or put two 6v globes in series. Using a resistor will be very difficult because a globe requires about 6 times normal current to allow it to start illuminating and then it takes the "rated current."]
But when when a device produces a signal; the voltage, resistance and current changes during the production of the signal and because these values are not constant, we use the term **IMPEDANCE MATCHING**.
Impedance really means "resistance that changes during the production of the waveform."

Impedance matching can be worked out mathematically, but you need to know all the parameters of the device and the circuit you are connecting together. This is rarely possible to obtain.
Rather than calculate the result, it is much easier and more-accurate to connect the two items and view the result on a CRO (Cathode ray Oscilloscope). But if you cannot do this, simply connect them and listen or view the output from a speaker, relay or LED etc.

We have already studied "Impedance Matching" in the circuits above, but did not identify the concept. We will now go over some of the circuits and show where impedance matching took place:

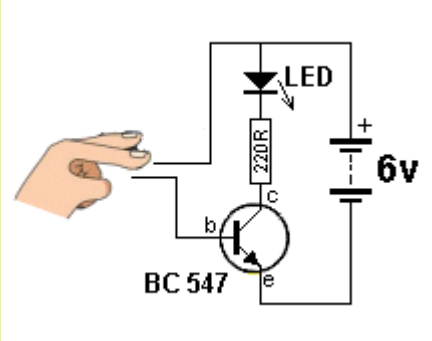

Fig 6

In **Fig 6**, the transistor matches the HIGH IMPEDANCE of your finger to the LOW IMPEDANCE needed to turn on the LED.
The transistor converts the 50k resistance of your finger to less than 0.5k (due to the gain or amplification of the transistor of about 100 -200).
You can also say it matches the HIGH RESISTANCE of your finger to the LOW RESISTANCE needed to turn on the LED.

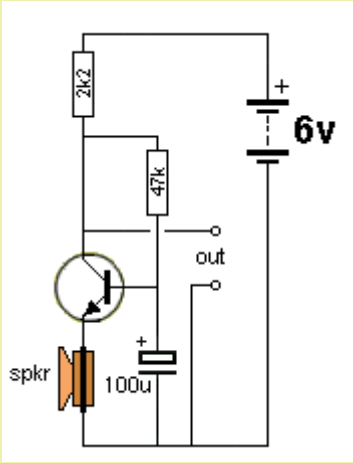

Fig 64

In **Fig 64**, the transistor matches the LOW IMPEDANCE of the speaker to produce a HIGH IMPEDANCE output on the "out" terminals, suitable for delivering to the input of an amplifier.
The transistor converts the 8 ohms of the speaker to more than 800 ohms (possibly 1600 ohms) due to the gain or amplification of the transistor (about 100-200) and at the same time the 0.5mV produced by the speaker is amplified to about 40mV to 80mV.

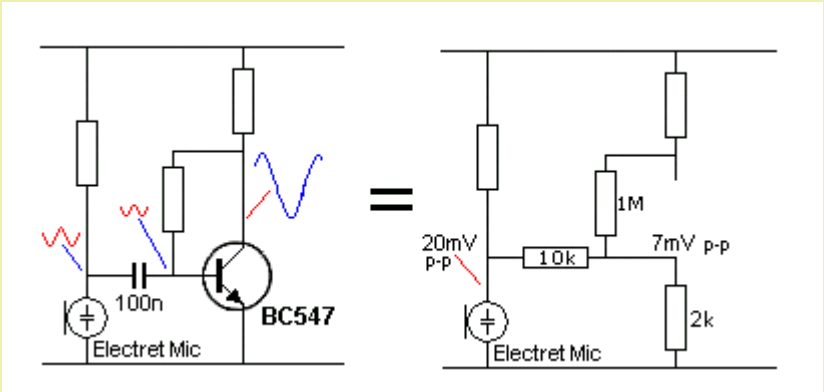

Fig 71f

The 100n capacitor in **Fig 71f** matches the impedance of the electret microphone to the input impedance of the transistor.
The impedance of the electret mic is about the same as the input impedance of the transistor but the mic needs about 0.5mA to operate and the voltage on the base of the transistor needs to be very accurately set for "self bias."
A capacitor separates these slightly different DC values while passing the AC signal..

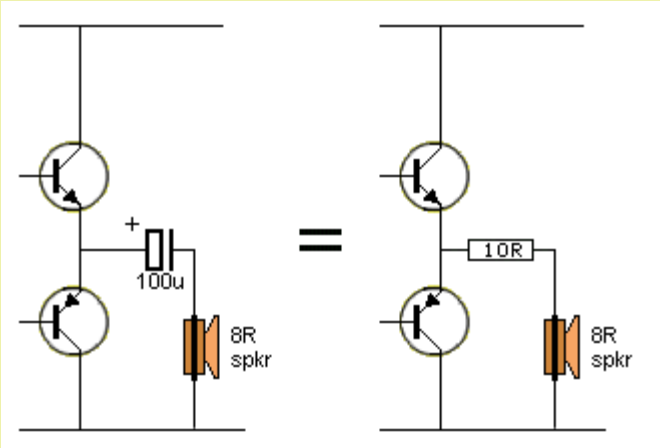

Fig 71e

Sometimes Impedance Matching is needed to separate or remove the DC component of a signal. In **Fig 71e**, the electrolytic matches the LOW IMPEDANCE output of the amplifier to the LOW IMPEDANCE of the speaker. The two impedances are almost identical and you could connect the speaker directly to the output of the amplifier, but the output has a voltage of approx mid-rail and this would enter the speaker and shift the cone when no audio is being reproduced. And the speaker would only be able to amplify the negative part of the waveform.
To remove the DC component of the waveform, an electrolytic is included.

SATURATING A TRANSISTOR

This is the last topic for discussion because it is the last thing to attend to when designing a circuit.
We have explained the fact that a transistor turns ON when the base voltage is above 0.7v and the current though the collector-emitter leads is approximately 100 times the base current.
This means a transistor with a gain of 100 will deliver 100mA to a collector LOAD when 1mA enters the base.
This is theoretically true and will occur in nearly all cases, but some devices such as motors and globes need a lot more current to get them started or to get them to turn **ON** because the cold resistance of a globe is only about 1/5 its hot resistance. This means a 100mA globe needs 500mA to get it to start to glow.
The same with a motor. The starting or "stalled current" is 5 times more than the operating or "running current.
On top of this the transistor might not have a gain of 100 and the voltage may be slightly higher than expected. All these things means the transistor must be turned **ON** with more than 1mA into the base.
If you deliver 2mA, it does not mean the transistor will deliver 200mA to a LOAD. If the load requires 100mA, delivering 2mA to the base will simply turn the transistor **ON** harder and the collector-emitter voltage will be slightly lower, but the load will still draw (or take) 100mA.
But the devices we mentioned above require 500mA to get them started, so the base current needs to be 5mA.
Now, here's the unfortunate part, 5mA base-current will not deliver 500mA collector current. The transistor needs more than 5mA base-current to get it to deliver this HIGHER current. It needs about 7mA.

This process can be proven by experimentation.
Simply increase the base current until the device is turned **ON**, then measure the base current. Add 1mA to 3mA to guarantee reliability and the circuit is complete.
This process is called **SATURATING A TRANSISTOR** or **GUARANTEEING TURN-ON**, or **FULLY SATURATING the TRANSISTOR** or **FULLY TURNING the TRANSISTOR ON**.

HYSTERESIS (see also Schmitt Trigger above)

Hysteresis is a feature of a circuit. It is when the circuit turns on at a particular voltage and turns off when a higher or lower voltage is reached. The gap between these two voltage-levels is called the **HYSTERESIS GAP.**
This is a very handy feature.
It prevents an effect called "hunting."
If a circuit turns on at say 6v, and turns off at 5.7v, any slight variation in the supply voltage will cause the output to change state. This may produce an undesirable effect of the circuit turning "on and off" at the wrong time due to supply voltage fluctuations. By increasing the gap between these two voltages, the circuit will remain in one state or the other - until the input voltage (the controlling voltage) increases or decreases.
The **Schmitt Trigger** (Fig 79a) is an example of a circuit using **Hysteresis**.
Any circuit with a positive feedback line, introduces the effect we are talking about.
The feedback line has the effect of assisting the input voltage.
In other words, it widens the gap between an ON state and an OFF state.
This is called POSITIVE FEEDBACK because it ADDS to the effect of the input voltage.
Even when the input voltage is falling, the feedback improves the ON or OFF state by taking the

circuit past the point where the change takes place.
Rather than thinking of the feedback as "positive," consider it as AIDING.
All **HYSTERESIS** feedback is **AIDING** or **ASSISTING** the effect you are trying to produce.

This circuit uses Hysteresis. The main "assisting component" is the 22k.

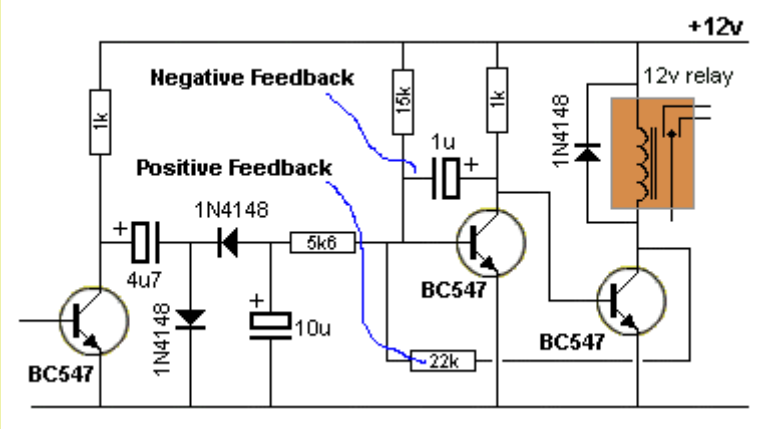

Fig 103cc

This is how the circuit works:
When the circuit is turned on, the base of the second transistor gradually develops 0.6v and the transistor turns ON.
The voltage between collector and emitter is about 0.2v and the third transistor is OFF.
When the first transistor receives an AC signal, an increasing voltage on the base causes the collector voltage to reduce and the charged 4u7 electrolytic moves towards the 0v rail. The negative lead of the 4u7 goes below the 0v rail by about 0.6v.
This allows the second diode to discharge the 10u electrolytic and the 0.6v on the base of the second transistor is reduced. Let's say it is reduced to 0.55v.
This causes the second transistor to turn off and the positive lead of the 1u electrolytic rises toward the 12v rail. The negative lead of the 1u rises too and this makes the transistor turn ON. In this process the 1u starts to charge and it has the effect of slowing down the "turning ON" of the second transistor.
But the pulses keep coming from the first transistor and 10u is kept discharged. The 1u keeps charging and eventually it is fully charged and now the pulses from the first transistor can finally turn off the second transistor.
The third transistor is turned ON and the 22k connected to the collector of the third transistor reduces the voltage on the base of the second transistor by about 0.15v
This helps the pulses from the first transistor to keep or put a low voltage on the base of the second transistor and even if these pulses stop, the voltage on the base will take time to rise via the 15k and this is called the **HYSTERESIS GAP.**
When the circuit changes state, the pulses from the first transistor will discharge the 10u and this will be "fighting against" the 15k and 22k resistors that will be trying to charge the 10u.

NEGATIVE FEEDBACK

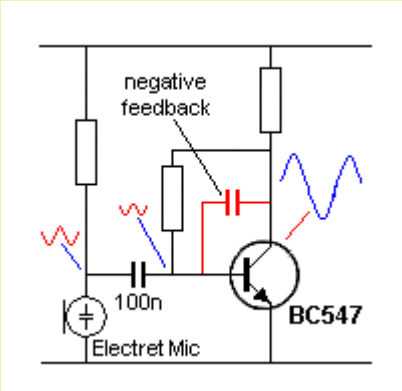

The circuit shows a capacitor between the base and collector. It provides **NEGATIVE FEEDBACK.**
If we remove the capacitor, when the base "moves down," the collector "moves up." In other words the signal is inverted.
When the capacitor is fitted, we have to start with the collector because it has more "power" and it is the lead that is driving the action of the capacitor and then go to the base.
When the collector voltage "moves down" the right plate of the capacitor moves down and it charges and tries to pull the left plate down too.

This is the opposite effect to the signal moving through the transistor.
This means the capacitor is working against the action of the transistor.
The capacitor will have more effect on high frequency signals while the low-frequency signals will be affected less.
Because the capacitor is working against the natural flow of signal through the circuit, it is called

NEGATIVE ACTION or **NEGATIVE FEEDBACK**.

BIASING THE BASE

The base of a transistor can be biased in many way. In other words, the current to be supplied to the base can come from many different parts of the circuit and delivering it is much more complex (complicated) than you think.
Before we go into the section on SELF-BIAS, we will look at the problem of adding a base bias resistor between the base and supply-rail.
In the following diagram a resistor is placed between the base and 6v supply.
If we select the correct value for this resistor, the circuit will produce the HIGHEST GAIN !!!!
This is the best gain you can get. But the circuit has a lot of drawbacks and difficulties.

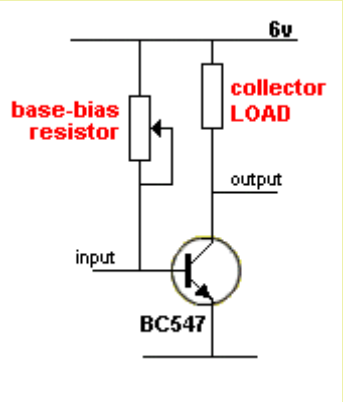

THIS CIRCUIT HAS THE HIGHEST GAIN !!!
It is NOT a "self-biased" stage

If you select a resistor for the LOAD and then select the base-bias resistor so that the transistor turns ON and produces a voltage on the base that is half-rail voltage, this circuit will produce the best and highest amplification of ALL designs. If the transistor has a gain of 250, the circuit will produce a gain of 250. If the transistor has a gain of 450, the circuit will produce a gain of 450.
BUT it will be very difficult to select the correct value. So we will use a variable resistor.
If the surrounding temperate of the project increases, the base-emitter current will increase and the collector voltage will decrease. The same will happen if the rail voltage increases. And the transistor will multiply the effect 250 to 450 times.
This circuit is suitable for an individual design where the base-bias resistor can be selected to suit the transistor but for mass-production and reliability over a wide range of transistors, the circuit needs individual attention to get the biasing correct.
But it is not suitable for mass-production as the gain of the transistor is very critical.
The pot on the base is only used to set-up the circuit and is replaced with the correct-value resistor.
In the SELF-BIASING stages discussed below, the voltage on the collector is fairly stable and fixed due to the base-bias resistor being connected between base and collector.
This feature is not provided on the circuit above and if you want the collector voltage to sit at 0v (actually about 0.15v) when the stage is turned ON, this is the circuit you must use.
Once you have selected this type of circuit, you need to select the LOAD resistor. This is will be as high as possible so the circuit takes the least current.
That's because the LOAD resistor will be effectively across the rails for most of the time.
Now select the base-bias resistor so the transistor decreases the collector voltage to zero.
Start with a very high base-bias resistor and monitor with collector voltage with a digital multimeter so you don't put any load on the circuit.
Decrease the value of the base resistor until the collector voltage reaches 0v.
This circuit will operate differently to a self-biased stage.
It will only respond to a waveform or signal that LOWERS the voltage on the base. This signal will TURN OFF the transistor and the collector voltage will RISE.
The input and/or the output can be capacitor-coupled to other stages and this arrangement will produce the maximum collector-voltage swing.
Here is the main problem with the circuit.
If you adjust the stage so the collector voltage is at 0v (0.15v) you have selected the correct value for the base resistor. But if you decrease the value by 50%, the collector voltage will not fall to a lower voltage but the transistor will be turned on HARDER.
This means the transistor is turned on HARDER than necessary and the input signal will have to be larger (higher amplitude) to turn the stage OFF.
In other words, you will have decreased the gain of the stage by using a low-value base resistor.

We say "decreased the gain of the stage" because it will require a higher input signal. The actual gain of the transistor will be 250 or 450 but the "effectiveness" will be reduced.
If the base-bias resistor is TOO LOW, the stage will have an "effectiveness" less than 250, and maybe less than 50. That's why seeing the value of the base-bias resistor is so critical. The transistor must be biased to the point where the voltage on the collector is just at the point of reducing to less than 0.5v

COMPARISON

To give a comparison, this circuit will produce a gain of about 250 with a transistor having a gain of 250, but if the base-bias resistor is placed between the base and collector (as shown below - to produce a self-biased stage) the stage will have a gain of about 70 -100.

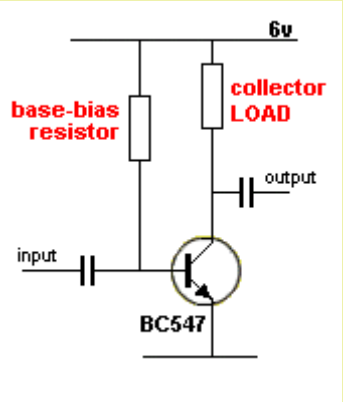

We will now cover some of the ways to bias a transistor using the SELF-BIAS arrangement.
We will consider a transistor has a gain of about 100 in a "self-biased" stage. (It can be as low as 10 or as high as 200).
This means the collector-emitter circuit can only deliver 100 times more current than is being supplied to the base.
But current supplied to the base is "wasted current" as it flows ALL THE TIME and for battery operated circuits, this current must be kept as low as possible.
Secondly, a transistor can only deliver current up to the maximum rated value for the transistor. If the maximum current is 100mA, a current of 1mA into the base will allow the transistor to deliver 100mA via the collector-emitter circuit. That is: the load can take 100mA. But as the current reaches the maximum value, the transistors gain decreases. This means a base current of 1mA will only allow the transistor to deliver about 50mA. As the output current requirement increases above about 50%, the base current must be increased.
This is one of the hidden problems with a transistor. It may take 2mA base-current to get to 70mA, 5mA to get to 80mA and 10mA to get to 100mA.
This is a big difference as the gain can drop from 100 to 10.
This is one of the factors you have to be aware of.
That's why the gain of a transistor is generally given for 10mA collector-current.

Working out the value for the base current is a big problem and we are going to cover only the small-signal stage.

BASE CURRENT

The following 4 diagrams show how base current is delivered to a small-signal stage in a "self-biasing" arrangement.
In this arrangement, the **base-bias resistor** is selected so the voltage on the collector is half-rail voltage. In this case it is 3v.
Circuits **A** and **B** have 3v on the collector.
But circuit **A** takes less current when "sitting around." Circuit **B** takes 22 times more current. This is due to the collector load.
Why select circuit **A** or **B**?
We have already learnt the current delivered to the next stage in a circuit depends on the current flowing through the COLLECTOR LOAD resistor. Refer to **Fig 13** and **Fig 62.**
This means circuit **B** will deliver more current.
One other factor you have to remember, is this: Circuit **A** requires a very small input current. Circuit B requires about 20 times more current. You can think of it this way: The input energy (that is the input voltage-and-current) is "fighting against" the base-bias resistor. It is much-easier to fight-against a

2M2 resistor as it is delivering much less current (to the base) than a 100k resistor.
Let's explain what we mean by "fight against."
For circuit **A**, the 2M2 is delivering current to the base. When the input current increases, the transistor is turned on MORE and the collector voltage falls. This means the current via the 2M2 reduces. This means you have to supply more base current to turn the transistor on.
Circuit **B** has a 100k base-bias resistor but the main criteria in turning the transistor ON is the large amount of current required by the base to get current-flow in the collector-emitter circuit so that a voltage-drop is developed across the 1k resistor. 22 times more current is required to get the same voltage-drop produced in circuit **A**.
Circuits **C** and **D** show the wrong combination of resistors, making the collector voltage too high or too low. If it is too high or too low, the stage will not (equally) amplify the positive and negative excursions of the input signal. However, this may be what you want.

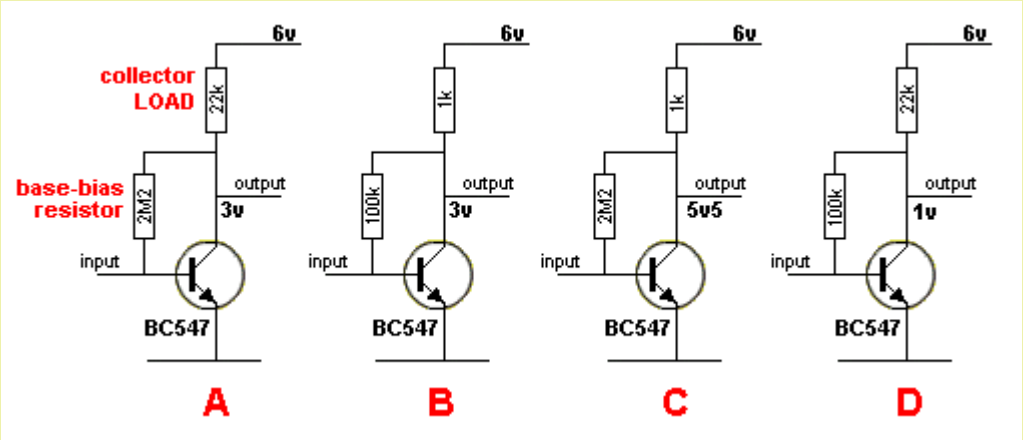

"Self Biased" stage

The second type of biasing is called a "Bridge" or "H-Bridge." Circuits **E** and, **F** show two bridge circuits.
Circuit **E** is very similar to circuit **A**. It needs about the same input current to circuit **A** and has about the same output-current capability.
However circuit **E** has a gain of about 22. Circuit **A** has a gain of about 70 to 100.
The gain of circuit **E** is defined as collector resistor divided by emitter resistor 22k/1k = 22.
The gain of circuit **F** is about 100.
Circuits **A** and **F** produce about the same gain and the only difference is two extra resistors in circuit **F**.
The only problem with circuits **E** and **F** is the rail voltage must be above 4v. If the rail voltage is less than 3v, the transistor will not be turned ON as the base will see less than 0.6v. The "self biased" stage will operate down to about 1v rail-voltage.

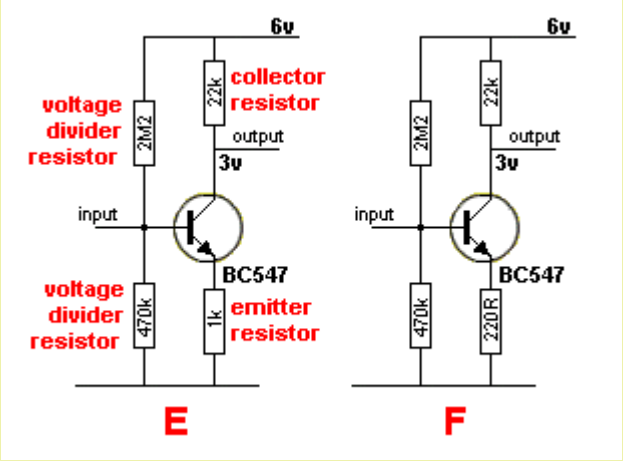

"Bridge" stage

The third type of circuit is biased just below the voltage needed to turn the transistor ON.
This stage takes very little quiescent current but the supply voltage cannot rise a large amount as this

will turn the transistor ON and change the characteristics of the stage.

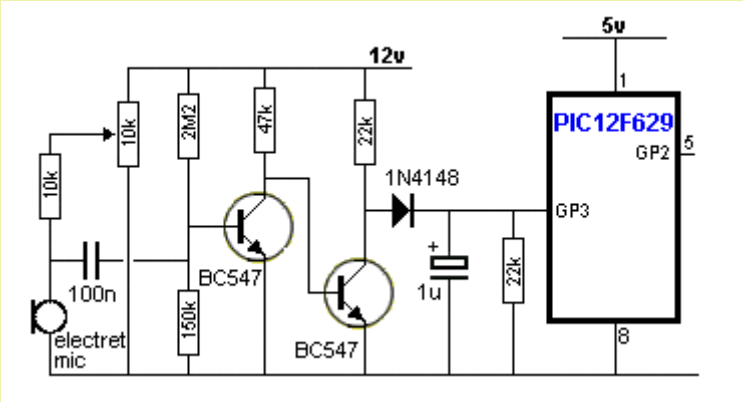

The first transistor is biased "OFF"

The starting point is to bias the first transistor so the voltage on the base is just at the point of turning it ON.
This allows the 47k resistor to turn on the second transistor and the diode does not see any voltage.
This means the 1u does not get charged and the input to the microcontroller sees a LOW.
This is called the QUIESCENT (standing, stand-by or idle) condition.
The gain of the electret microphone is adjusted by the 10k pot and when it receives a loud audio signal it produces an output of about 20mV.
This signal is sufficient to turn ON the first transistor and turn OFF the second transistor so that signal diode sees a HIGH pulse via the 4k7.
This voltage is passed to the 1u and it gradually gets charged. When the voltage on the 1u reaches about 4-5v, the microcontroller sees a HIGH and the program in the micro produces an output.
The main problem with this circuit is the 20mV required to turn on the first transistor.
Different transistors have varying base voltages. You will need to set the base voltage very accurately for the circuit to work.

What do we mean by: **DIFFERENT BASE VOLTAGES**?
Most silicon transistors start to turn ON when the base voltage reaches 0.65v. But some transistors start at 0.55v. And some transistors are fully turned on at 0.7v while others need 0.75v.
These different voltages are not important in most cases except for the circuit above that keeps the transistor turned off until required.

We are now going to show how a transistor TURNS ON. In this discussion, the base voltage is delivered from an adjustable power supply
An NPN transistor is not turned on AT ALL when the base voltage is below 0.45v. This is shown in diagram **A**:

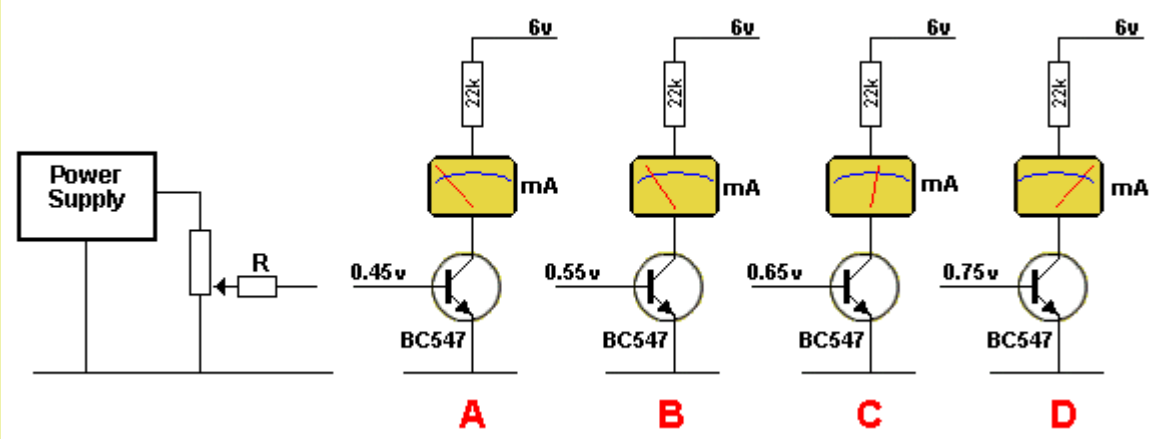

As soon as the base voltage reaches 0.55v, the transistor starts to turn ON. This is shown in diagram **B**.
A transistor is a current-controlled device and this is how it works:
As the voltage from the power supply is increased from 0.50v to 0.55v, current will start to flow into the base and the transistor will start to turn ON. The transistor will turn on MORE when the base

voltage rises to about 0.65v.
The value of 0.65v shown in diagram **C** just lets you know the transistor is turned on a certain amount. It's a characteristic voltage produced by the transistor that we have no control over.
When we read this voltage we know the transistor is a point of just being turned ON. Another way to look at the situation is this: The transistor detects how much current you are delivering from the power supply and it delivers about 100 times this amount through the collector-emitter circuit.
Here's the highly technical part: The voltage from the power supply must be CURRENT-LIMITED. This is done by adding the resistor **R**. The voltage from the power supply flows through resistor R and allows the transistor to develop a base voltage called a CHARACTERISTIC VOLTAGE or BASE VOLTAGE. This is a voltage developed by the transistor when a certain amount of current is flowing and by measuring this voltage we know how much current it is receiving. Adding the resistor allows the transistor to take the amount of current it requires. If we connect the power supply directly to the base, we will force extra current into the base and over-ride the natural requirements of the transistor.
As you increase the voltage from the power supply, more current will enter the base and the voltage on the base will rise slightly to indicate the new value of current. This is shown as 0.75v in diagram **D**.
The transistor will deliver more current through the collector-emitter circuit, but as the current increases to a maximum value (every transistor has a maximum allowable collector current), it may not be able to deliver 100 times more than the base current. It may be only 50 times or 10 times.
Increasing the current (further) into the base will have no effect on the base voltage. The base voltage is as high as it will go. The transistor is SATURATED (turned ON as hard as possible) and no further increase in collector-emitter current is possible. Increasing the current into the base will simply overheat the transistor and damage it.

LEAKAGE

This topic covers small, unwanted, currents produced when two or more transistors are connected together.

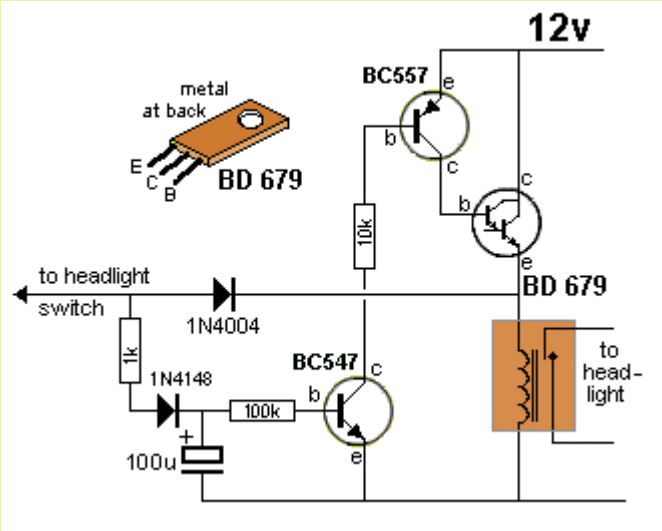

Faulty Headlight Extender Circuit

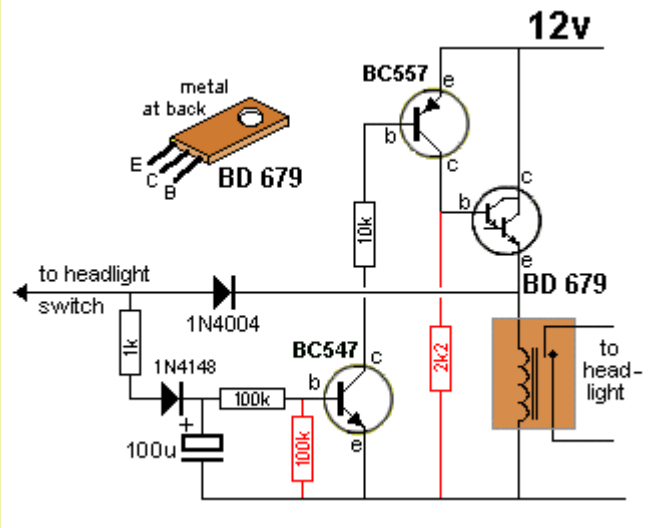

Headlight Extender Circuit - fixed

In the Faulty Headlight Extender Circuit we see 3 transistors directly connected together.
When the 100u discharges, the BC547 turns OFF and this turns off the BC557 and also the BD679.
But the relay remains activated.
This is due to the BC547 not turning off fully and a very small current flows though the collector-emitter leads.
This current is amplified by the BC557 (about 200 times) and then by the BD679 (about 20,000 times). The resulting current is sufficient to keep the relay activated.
Two resistors are needed to turn the circuit off.
The 100k on the base of the first transistor discharges the 100u and makes sure the voltage on the base is zero so the transistor is fully turned off.
The 2k2 on the base of the BD679 does not remove the slight leakage current though the BC557 but it flows through the 2k2 and this produces a very small voltage-drop, that is too small to turn on the BD679, and this makes sure the BD679 turns off.

This type of problem will occur whenever two or more transistors are directly coupled together.
Even a leakage current of less than 1microamp will amplify to many milliamps with the gain of two or three transistors.

See more on leakage in Spot the Mistake P27 Leakage.

High-side Vs Low-side Switching

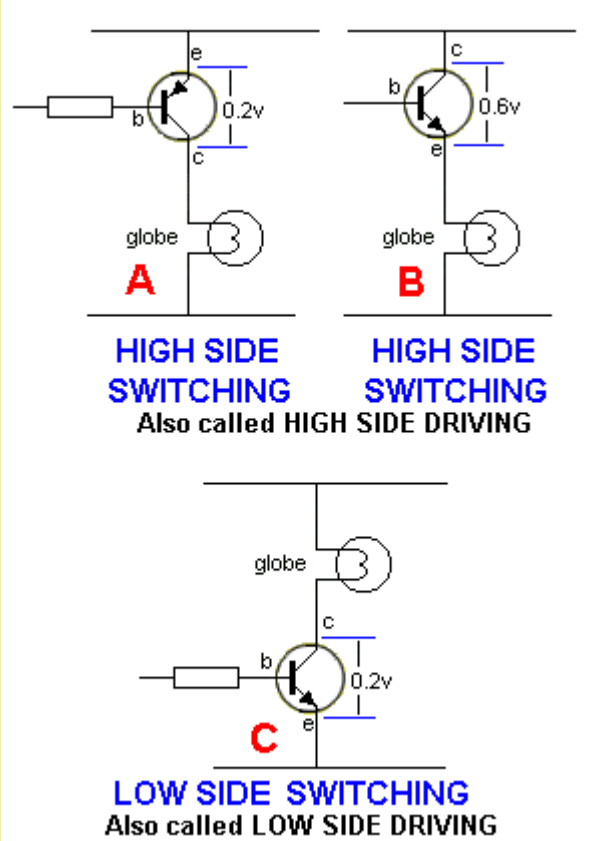

Devices such as globes, motors, relays etc are called LOADS. They can be placed above or below the driver transistor. When the driver transistor is above the load, as shown in diagrams A and B the circuit is called **HIGH-SIDE SWITCHING**. When the driver transistor is below the load, as shown in diagram C, the circuit is called **LOW-SIDE SWITCHING**.
The circuit for low-side switching is much easier to design and can be less expensive however high-side switching is the only arrangement available in cars and trucks as the load (globes and motors) are generally connected to chassis (to save wiring) and the control wire (power wire) comes from the positive of the battery.
For the **HIGH-SIDE SWITCHING**, the control line (the input to the base) can be active LOW (as in the first diagram). In the second diagram, the base is taken HIGH and the emitter follows. The voltage across the collector-emitter terminals will be higher than the fist example and the transistor will get hotter. This is because the base of the NPN transistor cannot rise above the supply (in most cases such as cars and trucks) and the voltage between collector and emitter will be about 0.65v.

The three diagrams above show the voltage across the collector-emitter leads when the transistor is fully conducting.
In diagram **B** the transistor is an emitter-follower and the voltage is three times larger than diagrams **A** and **C**. This means the heat generated by the transistor will be three times larger than diagram **A** or **C**.

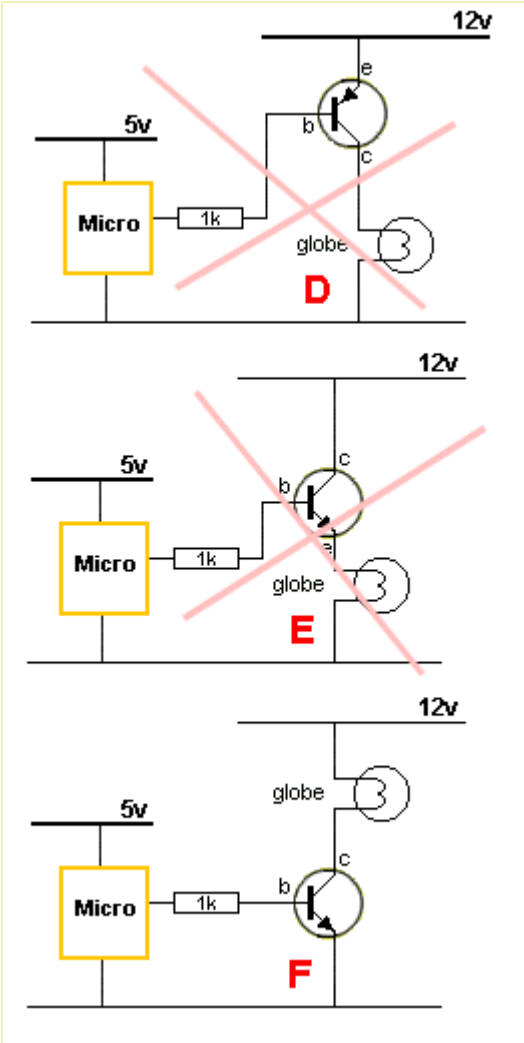

Diagram **D** shows the problem trying to switch a load on a 12v supply, from a 5v microcontroller. When the microcontroller is HIGH, the voltage is not high enough to turn off the transistor. The voltage on the base must be nearly 12v for the transistor to turn off.
This circuit will NOT WORK.
In diagram **E**, the voltage on the base will only rise to 5v,
and thus the globe will see only 4.4v and will not illuminate fully. The transistor will get fairly hot.
The solution is to drive the LOAD via LOW SIDE SWITCHING as shown in diagram **F**.

It is possible to switch a HIGH SIDE transistor from a microcontroller by including a zener diode so the transistor is turned off when the microcontroller is HIGH. The 10k resistor makes sure the base sees 12v when the micro is HIGH. The voltage of the zener is chosen so that when the micro is HIGH, the micro rail voltage, plus the voltage of the zener is more than the supply to the globe.

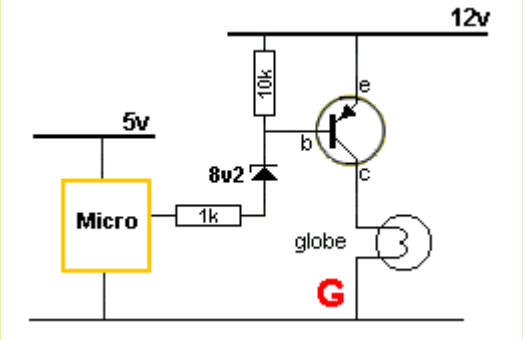

VOLTAGE TO CURRENT CONVERTER

This sounds very complex but it is very simple.
The simplest voltage-to-current component is a resistor.
A resistor performs lots of different jobs, depending on the circuit.
One of its jobs limits the current to a LED. It is called a CURRENT LIMITING RESISTOR. It can also be called a VOLTAGE TO CURREN2ONVERTER.
Here's how it works:

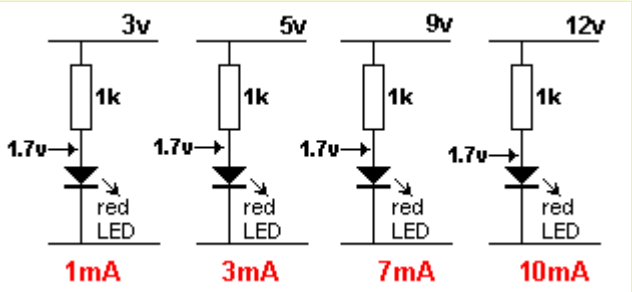

Fig 103d.
A resistor is a **VOLTAGE TO CURRENT CONVERTER**

A red LED must be delivered a voltage of exactly 1.7v for it to work. In other words it must be connected to a 1.7v supply.
But a 1.7v supply is very hard to obtain, so we use a 3v supply and a dropper resistor.
The resistor converts the 3v to 1.7v.
This is easy to understand because the 3v supply is fixed at 3v and when a voltage is delivered to the red LED it develops exactly 1.7v across it. The resistor sits between the 3v and 1.7v

voltage across the resistor increases. This is shown in the diagrams above.
When the voltage across a resistor increases, the current through it increases. That's how we get 3mA, 7mA and 10mA. This is called VOLTAGE TO CURRENT CONVERSION.
The VOLTAGE on the input goes up and down and the CURRENT through the LED goes up and down.
The input CURRENT will also go up and down but we are only covering the fact that the input VOLTAGE rises and falls and the output CURRENT RISES and falls.
Any circuit that produces this effect is called a VOLTAGE TO CURRENT CONVERTER.
A transistor can also be connected to produce VOLTAGE TO CURRENT CONVERSION.
The following circuit is an emitter-follower. It is also a VOLTAGE TO CURRENT CONVERTER. A rising and falling voltage on the input creates a rising and falling CURRENT on the output.
It also produces a rising and falling voltage on the output but we are only concerned with the fact that the circuit produces a rising and falling **CURRENT** on the output when the input **VOLTAGE** rises and falls.

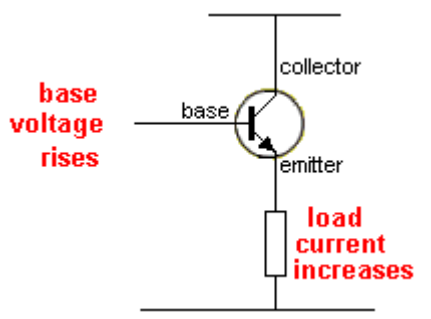

Fig 103e.
An emitter-follower is a **VOLTAGE TO CURRENT CONVERTER**

The circuit in **Fig103e** requires say 1mA input current. The output current will be 100mA. The circuit has the capability of increasing the current or AMPLIFYING the current. The resistor circuit above does not AMPLIFY the current. It is only a voltage-to-current converter.
The transistor performs a VOLTAGE TO CURRENT CONVERSION and also produces CURRENT AMPLIFICATION.
A common-emitter stage also performs VOLTAGE TO CURRENT CONVERSION.

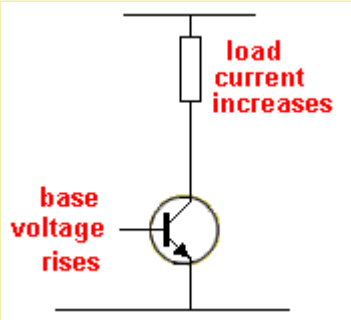

Fig 103f.
A common-emitter stage is a **VOLTAGE TO CURRENT CONVERTER**

A slight increase in the voltage on the base of a common emitter transistor will increase the current through the load by a large amount.
As you can see, there are lots of circuits that perform VOLTAGE TO CURRENT CONVERSION but we usually identify them for other features and that's why the term VOLTAGE TO CURRENT CONVERSION is rarely mentioned.
There are also special circuits (using op-amps) to perform precision voltage-to-current conversion, but we are concentrating on transistor stages.

ANOTHER VOLTAGE TO CURRENT CONVERTER

Here is another **VOLTAGE TO CURRENT** CONVERTER:
A photo detector (A light dependent resistor - LDR) produces a very wide change in resistance from dark to light conditions and when it is connected to a LOAD RESISTOR, the voltage across this resistor will change considerably.

But we cannot use this voltage-change to directly illuminate a LED or drive a motor because it does not have enough current. We need to convert this voltage-change to CURRENT-CHANGE.
The current through the resistor might be up to 1mA. A motor or LED or relay needs 10mA to 300mA.
Here is what we have:
We have a wide (large) change in **voltage** and require this to be converted to a wide change in **current**.
We say this voltage-change has very weak driving capability because it will not illuminate a LED or anything else.
We want a POWERFUL DRIVING CAPABILITY and that's what a CURRENT DRIVER is capable of doing.
In other words we want to convert a **WEAK** driver to a **POWERFUL** driver.

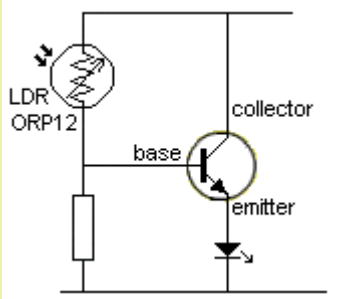

Current to voltage converter

When light falls on the LDR, the voltage across the resistor increases and this voltage-rise is detected by the base of the transistor and a small current passes into the transistor. The transistor amplifies this current and delivers up to 100 times more current to the circuit created by the collector-emitter terminals. The LED is in this circuit and the LED will illuminate brightly when 5 to 25mA flows. This is only a demonstration circuit to show the effect of shining a light on the LDR. It may cause the LED to shine too bright and be damaged as no current-limiting resistor has been included to protect the LED.

CURRENT TO VOLTAGE CONVERTER

A resistor can be used as a **CURRENT TO VOLTAGE CONVERTER**.
Fig 103g shows a resistor called a **SENSE RESISTOR**.
It is a low-value resistor in series with one line of a circuit and its function is **not to change** the operation of the circuit in any way.

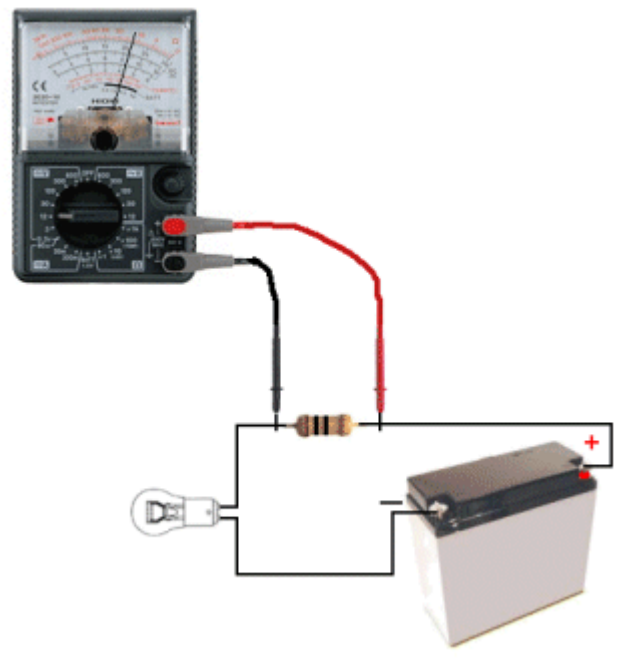

Fig 103g. Measuring the "sense resistor"

(basically a voltmeter (or milli voltmeter).
When a current flows though a resistor, a voltage is produced across the resistor. You can also say a **VOLTAGE DROP** is produced across the resistor. If the resistor is exactly 1 ohm, a voltage of 1v will be produced across it when 1 amp is flowing or 1mV is produced for each 1mA of current. Using a 1 ohm resistor produces an easy conversion.
If the circuit is 24v or 50v, a loss of 1 volt will not be noticed.
But if the circuit has a lower voltage, (say 5v) the resistor will be need to be a lower value so the drop across the **sense resistor** does not upset the operation of the circuit.
The actual value of the resistor is not important for this discussion, It can be 1 ohm or 0.1 ohm.
The important point is to understand the function of a **Sense Resistor**.
In the circuit above, if the globe is replaced by a 20watt or 50watt, globe, the current through the sense resistor will increase. We measure the voltage (in millivolts) across the resistor and we convert the value into CURRENT. This is a CURRENT to VOLTAGE CONVERSION.
A transistor can be used as a CURRENT TO VOLTAGE detector. **Fig 103h** shows a 1 ohm sense resistor connected to a transistor. When the circuit is turned ON, the charging current (the current flowing into the battery) will be high and when the voltage across the **sense resistor** reaches 0.65v, the transistor turns ON and the voltage on the collector reduces. This turns on the red LED and reduces the voltage on the ADJ terminal of the LM317T regulator and the regulator outputs a lower current to the batter. This is how the circuit limits the charging current. The resistor is **converting** the current flowing through the circuit (and into the battery) into a voltage, and the transistor detects the voltage. The transistor is not detecting or measuring the current. It has absolutely no idea of the amount of current flowing. It is detecting the voltage across the resistor. The resistor is performing the **CURRENT to VOLTAGE** conversion.

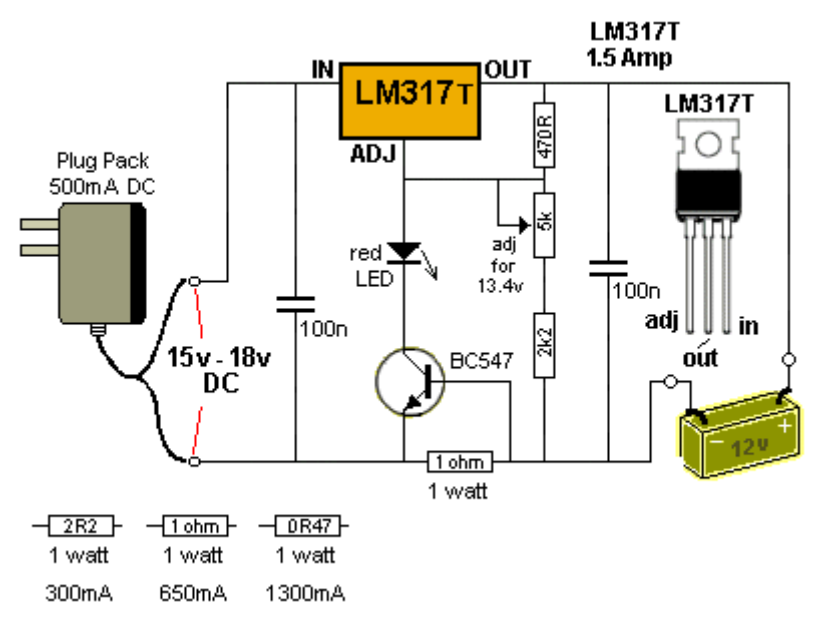

Fig 103h. The 1ohm Sense Resistor.

SQUEALING, BUZZING, OSCILLATING, and MOTOR-BOATING

We have studied **POSITIVE FEEDBACK** and the effect it produces. It turns an amplifier into an oscillator.
The following circuit will not work:

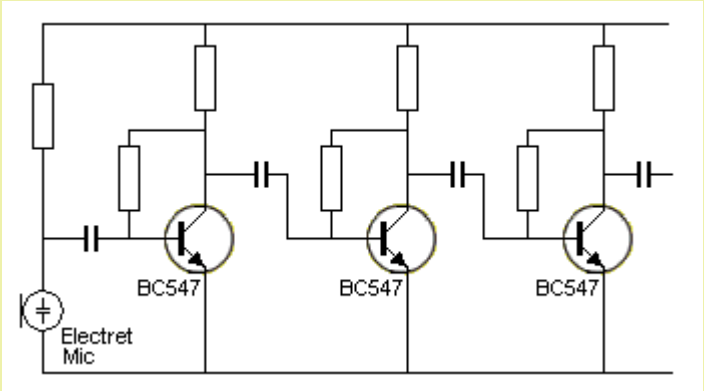

Fig 104a.

The three stages of amplification will produce so much gain that the circuit will self-oscillate. The output will be a "buzzing-sound" and the fault will be impossible to find because it comes from **within** the design of the circuit. The first thing you must do is add "power-supply decoupling."
The unwanted sound produced by the circuit is called **MOTOR-BOATING** and is generated in the "front-end" by very small noises or "disturbances" and amplified by the stages that follow.
Fig 104b shows where the noise starts. It can be produced by the electret microphone or by the noise in the junctions of the first transistor (due to current flowing in the collector-emitter circuit).

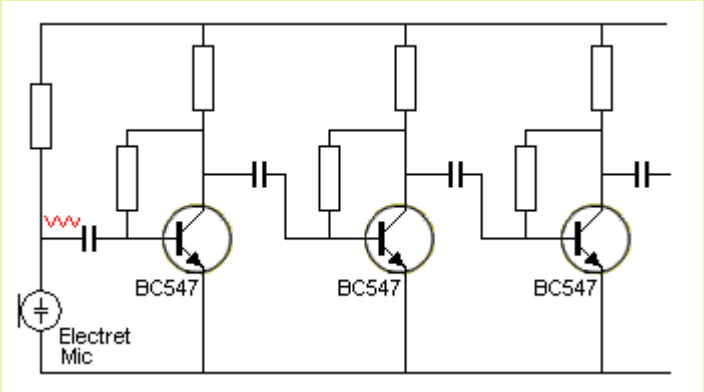

Fig 104b.

This waveform will be very small and almost impossible to detect via any test-equipment, but it will start in the first stage and pass through the coupling capacitor as shown in **Fig 104c**.
The next stage will amplify this "noise" and it will be amplified further by the following stages.
There will be some slight cancellations from the various stages as the signal will be "out-of-'phase" but the end result will be a "putt-putt-putt" or squealing from the output.
The general term for this is called MOTOR-BOATING and is due to the high gain of the circuit.
The noise will appear on the power rail and get passed to the front-end where it will be amplified more.

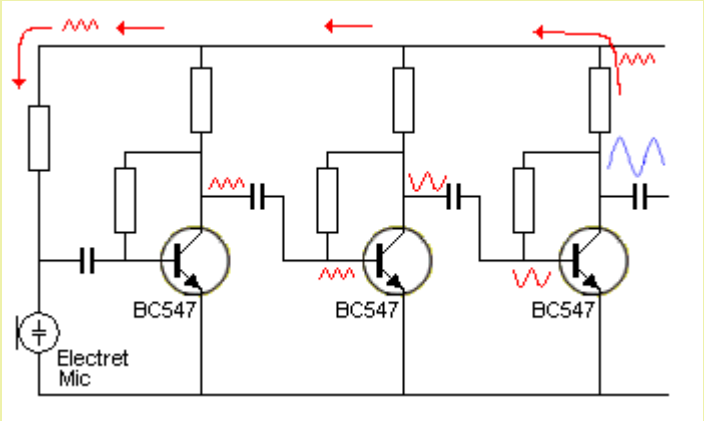

Fig 104c. The positive feedback loop producing "Motor-boating"

This effect can be reduce and eliminated by a term called **DECOUPLING**.
Decoupling is achieved by adding capacitors [electrolytics] (and resistors) across the power rails so that each stage is effectively powered by a separate supply.
Adding an electrolytic can sometimes make a big difference and sometimes it will make no difference. It all depends where it is connected and the value.

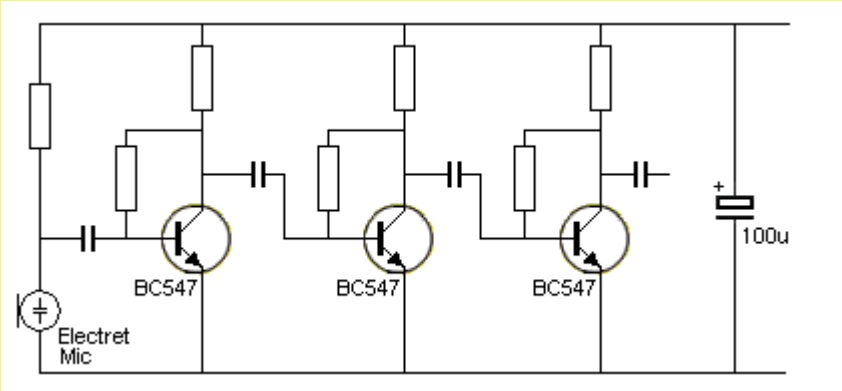

Fig 104d.

Fig 104d shows an electrolytic connected across the power rails. This is called **DECOUPLING THE POWER RAILS** and effectively tightens up the power rails so that any noise on the positive rail is removed.
But, as you can see, the power rails extend to the first transistor and although the rails may be "tight" near the battery they can "move" near the first stage.
This is due to the wiring between the stages or the tracks on the PC board. That's why an electrolytic across the battery may have little effect on removing our motor-boating problem.

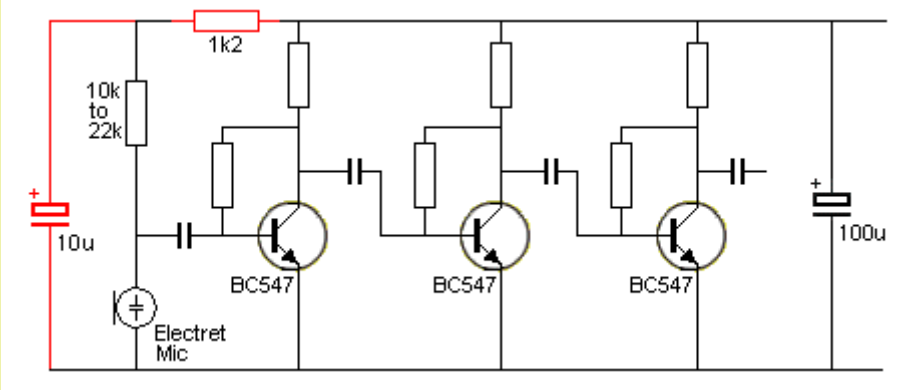

Fig 104e.

Fig 104e shows an electrolytic connected across the supply that feeds the electret microphone and 1k2 resistor to separate the supply we have just created, from the main supply rail.
We have effectively created a separate power supply. It is fed by a 1k2 and kept "tight" by the 10u capacitor.
The electrolytic does not have to be a high value because the electret mic takes very little current and the voltage-waveform (the AC signal) produced by the microphone is very small (about 20mV).
These two items **very effectively** decouple the microphone from the supply rails so the microphone has its own supply. The 1k2 resistor does most of the "separation." The voltage-drop across it will be very small and it will not affect the operation of the circuit, but the small voltage-drop will prevent any noise on the power rails being fed to the microphone via the 10k resistor.

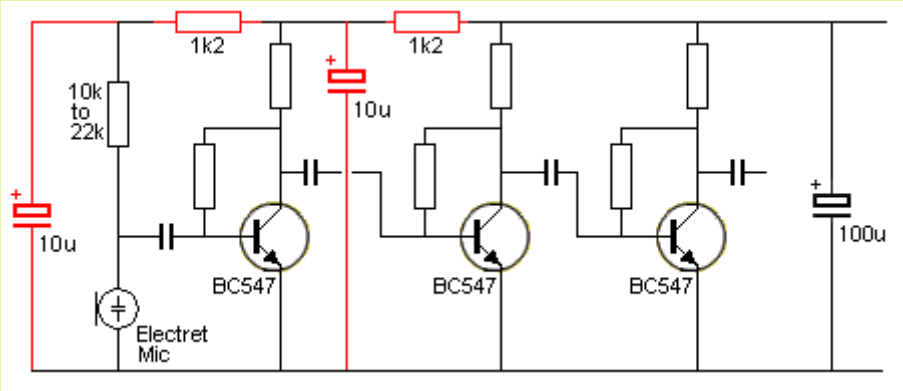

Fig 104f.

To remove any slight motor-boating problems (if they still exist); a power-supply filter (called power-supply decoupling) made up of a 1k2 and 10u can be placed after the first amplifier stage as shown in **Fig 104f**.
By selecting the value of capacitance and resistance, this arrangement will remove almost all motor-boating problems. It is a very-effective form of suppression.
Decoupling is most-effective on the pre-amplifier stages, however every circuit is different and these two components only deal with the low-frequency motor-boating type of instability. Some circuits also produce high-frequency oscillations (about 1MHz) and these need removing by a different value of capacitor-feedback.

BREAKDOWN and ZENER MODE

There are two conditions or states where a transistor can be instantly damaged. This is due to voltage applied in the wrong direction or the application of voltage that is higher than the rating of the transistor.
Voltage will kill a transistor faster than excess current.
A high voltage spike can damage a transistor instantly.
However if the excess voltage does not have enough current to damage the transistor, it will recover and we can use this feature in a circuit.
Breakdown and zener mode are different.
In **breakdown mode**, suppose we have a transistor that has a specification of 85v for the voltage it will withstand between the collector and emitter as shown in Fig 104g:

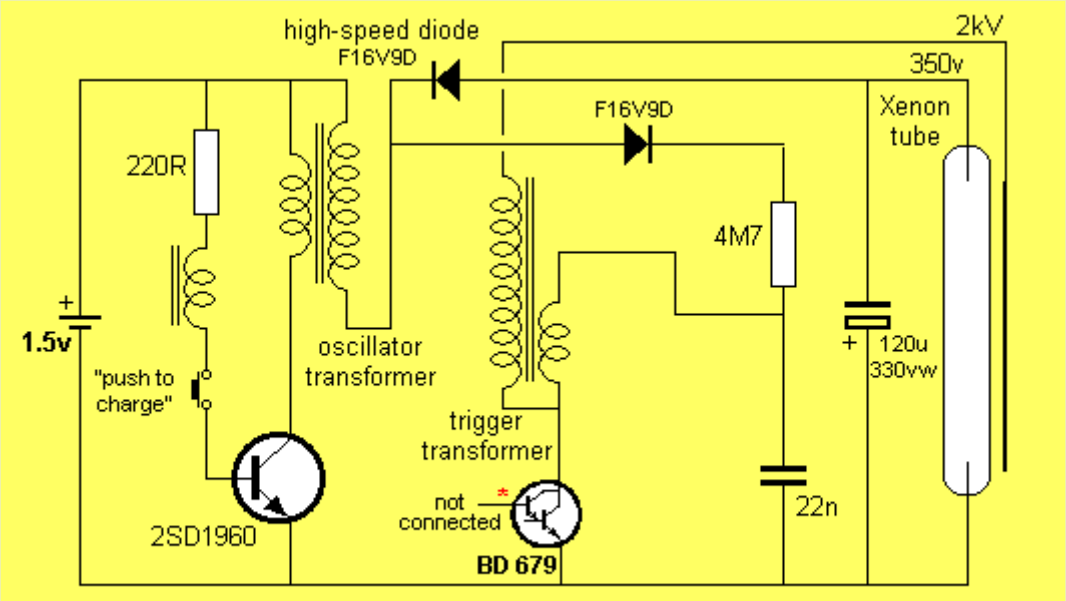

Fig 104g XENON FLASHER - FLASH CIRCUIT

It will "resist" a voltage of 85v and this voltage will appear across the collector-emitter leads. When the voltage increases to 86v, 87v ... the transistor will suddenly breakdown and only a few volts will appear

lower voltage applied, it will operate as an undamaged device.

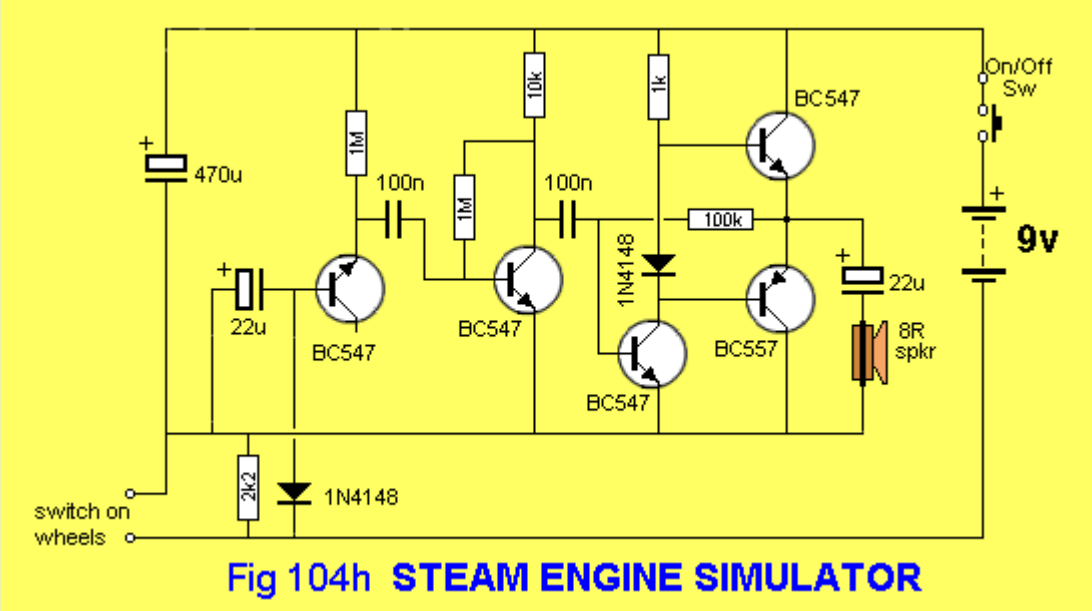

Fig 104h **STEAM ENGINE SIMULATOR**

In **zener mode**, the base-emitter junction is connected to a voltage higher than 9v via a resistor. The junction will breakdown and a voltage of about 7v will appear across the base-emitter leads and the excess voltage will be dropped across the resistor.
The zener-effect or zener mode can be used to produce white noise or a 7v zener reference. **Fig 104h** shows the first transistor with the base-emitter junction reverse-biased to produce a "noisy zener" via the 1M feeder resistor. The noise is picked off via the 100n and amplified by the remainder of the circuit.

TRANSISTOR TESTER

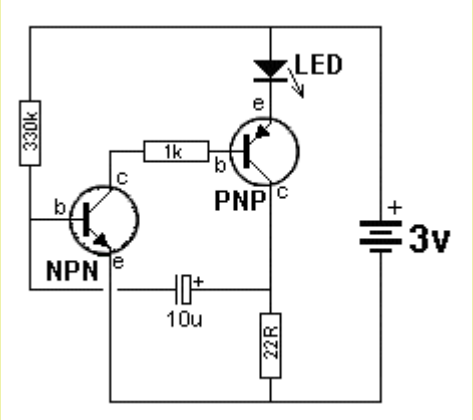

This circuit is basically a high gain amplifier with feedback that causes the LED to flash at a rate determined by the 10u and 330k resistor.
Remove one of the transistors and insert the unknown transistor. When it is NPN with the pins as shown in the photo, the LED will flash.
The circuit will also test PNP transistors. To turn the unit off, remove one of the transistors.

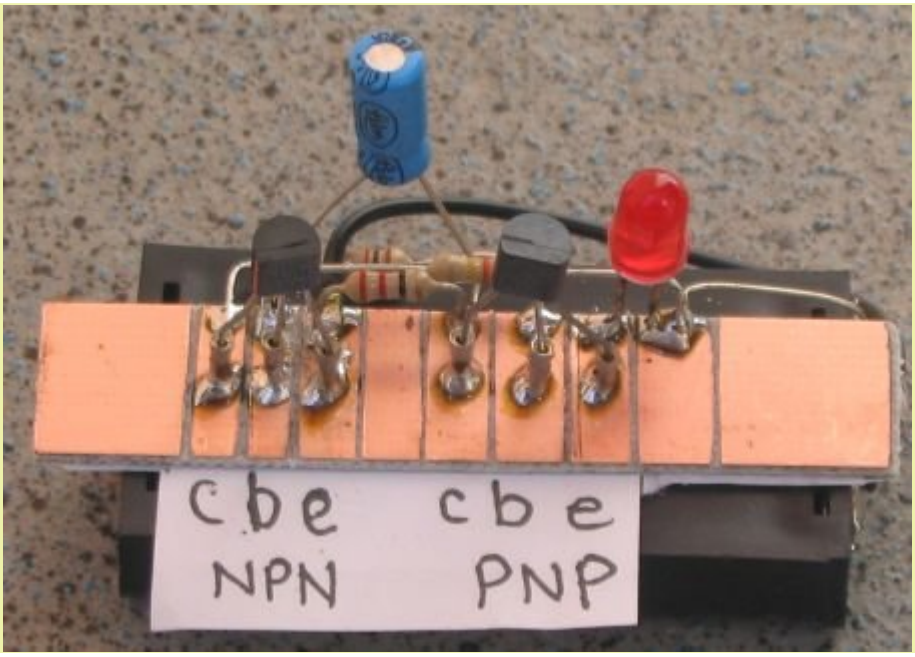

ZENER TESTER

The maximum voltage a transistor can withstand is called the ZENER VOLTAGE of the transistor.
It is Vce - the voltage between (across) collector and emitter. It is also the maximum supply voltage or circuit voltage or the voltage generated by an inductor in the collector-circuit and can be tested via the following circuit. This circuit will also test ZENER DIODES and LEDs.

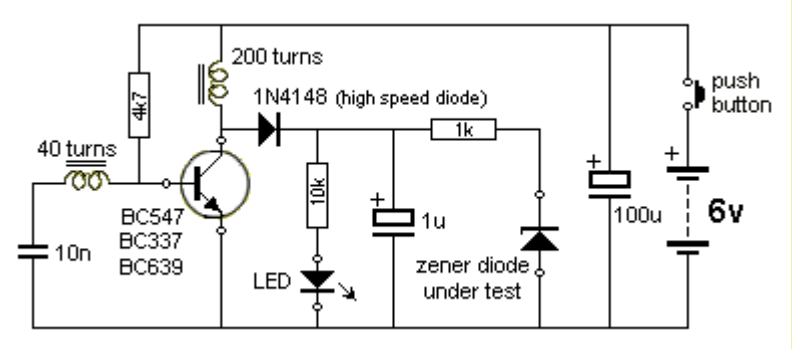

TRANSISTOR and ZENER TESTER CIRCUIT

The circuit is a **flyback oscillator**. This type of oscillator energises an inductor then turns off very quickly and the magnetic field (flux) produced by the inductor collapses and produces a very high voltage in the opposite direction. The maximum voltage produced by the circuit depends on the "maximum voltage capability" of the transistor.
The voltage produced by the inductor is over 120v but the transistor will zener at a voltage lower than this and thus the output voltage will be determined by the characteristic of the transistor.
A diode on the output of the inductor passes this high-voltage-spike to a 1u electrolytic, which stores the energy and provides a high voltage output.
The circuit will test transistors up to 120v and zeners up to the voltage produced by the transistor.
The project is built on a strip of PC board cut into lands with a file or saw. The following diagrams shows the parts placement and connecting the 5 button cells to the board.
The project can be built in an evening and added to your TEST EQUIPMENT.

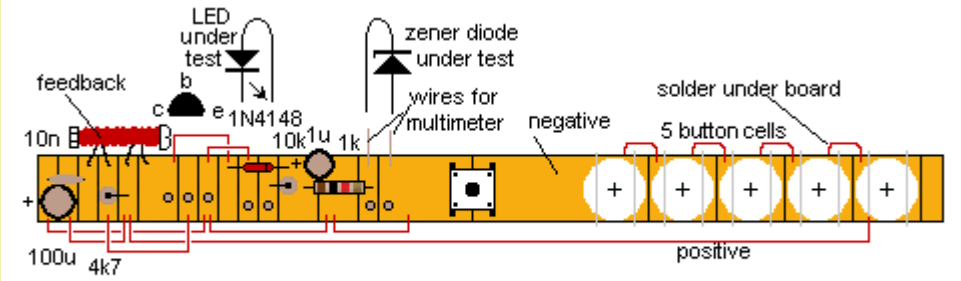

ZENER DIODE TESTER COMPONENTS LAYOUT

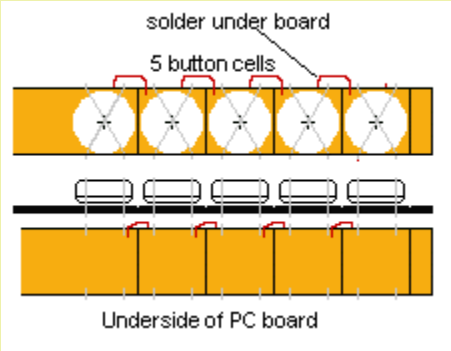

TESTING A TRANSISTOR

When testing a transistor, fit it into the pins marked C B E. If you have a LED connected to the LED terminals, it will glow. If you remove the LED and measure the voltage across the 1u electrolytic, it will provide the maximum working voltage for the transistor.

TESTING A ZENER

When testing a zener, place it in the pins provided. If the zener is around the wrong way, the voltage across it will be less than 1v.
When it is placed correctly, you can read the zener voltage with a high impedance multimeter such as a digital meter.

TESTING A LED

When testing a LED, fit it into the pins for the LED with the cathode lead (the shorter lead) to the left. It will glow very dim because the dropper resistor is very high and only allows 4 - 6mA to flow.
This will give you a good idea of the relative brightness of a LED when compared to others in a batch.

THE TRANSISTOR & ZENER REGULATOR

A transistor can be used to amplify the characteristics of a zener. You can also say the transistor is a **BUFFER** or **EMITTER-FOLLOWER**. It is another example of the transistor as an **AMPLIFIER** - a **DC AMPLIFIER** - indicating it amplifies the "steady-state" conditions provided by a zener diode.

We will start with the simple **Zener Regulator** circuit, then add the transistor amplifier. After that, we will remove the zener and add another transistor to improve the smoothness of the output waveform.

A simple zener regulator circuit is very wasteful however it is the basis for creating a stable output voltage from a voltage that may be rising and falling a considerable amount.
The following circuit shows a simple zener regulator:

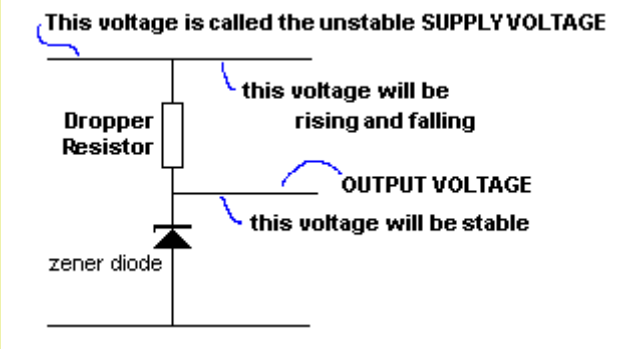

A Zener Regulator Circuit

A **Zener Regulator Circuit** consists of a zener and a resistor. The resistor is called a **Dropper Resistor** and it is designed to limit the **CURRENT**. It is not designed to limit the VOLTAGE. The zener diode performs the task of limiting or SETTING the voltage on the output.
The current through the Dropper Resistor will be shared between the zener diode and the LOAD (on the output of the circuit). These two items may or may not share the current equally, and the amount of share will depend on the value of the LOAD. We can also say the Dropper Resistor is a **CURRENT LIMITER**. If is is not included, a 12v zener connected to a 15v supply would draw (or take) a very high current and "burn out."

Here's the important fact about the current-sharing between the zener and load:
Suppose the SUPPLY VOLTAGE is fixed.
Here's an example of how the zener diode works:
Suppose we select a resistor so that 100mA flows through the zener when no load is present. Fig (a)
When the load takes 50mA, the zener takes 50mA. Fig (b)
When the load takes 90mA, the zener takes 10mA. Fig (c)
When the load takes 100mA the zener takes 0mA. Fig (d)

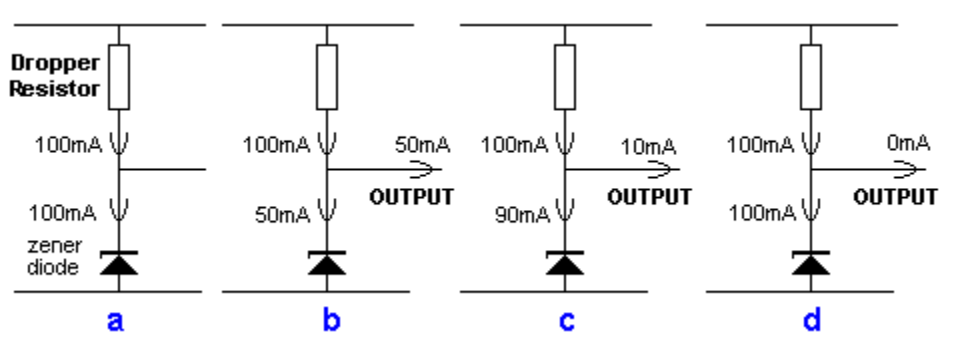

Current-sharing between the zener and output

Up to this point the circuit works perfectly. Even though the zener takes 0mA, the circuit is operating perfectly and the output is smooth. If the load tries to take 101mA, the output voltage will DROP.
This is point at which the circuit is said to FALL OUT OF REGULATION.
The load (the OUTPUT) can take more the 102mA and the output voltage will drop further, but we are interested in the range where the output voltage is STABLE (fixed).
In this example, the current though the Dropper Resistor is ALWAYS 100mA. The current is then split (or shared) between the zener diode and the LOAD.
This feature is always the case with a zener diode regulator.
100mA is always flowing though the Dropper Resistor and if the load is taking only 10mA, this type of regulator is very inefficient.
When the supply rises, the current though the Dropper Resistor will increase. When the Supply falls, the current through the Dropper Resistor will decrease. During this time the output voltage of the circuit will remain constant providing the current though the zener is always at least a few mA and the maximum value

does not allow the zener to get too hot. If the zener gets too hot it may fail.

The efficiency of the **ZENER REGULATOR** can be improved by adding a transistor. The transistor is an amplifier. A **CURRENT AMPLIFIER**. (also called a DC amplifier)
This type of circuit is sometimes called a **SUPER ZENER or AMPLIFIED ZENER**. The transistor is connected as an emitter-follower as shown in the following diagram:

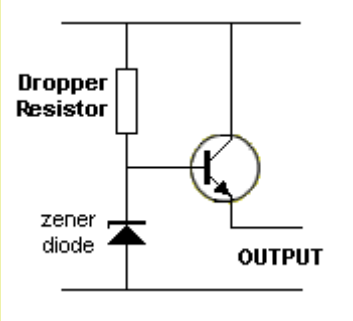

An emitter-follower transistor

If the transistor has an amplification-factor of 50, it will require 2mA (into the base) for each 100mA delivered to the output.
This means our Zener Regulator only needs to deliver 2mA and the output can deliver 100mA. The emitter-follower transistor must be a POWER TRANSISTOR.
Here are some examples from 100mA to 2Amp:

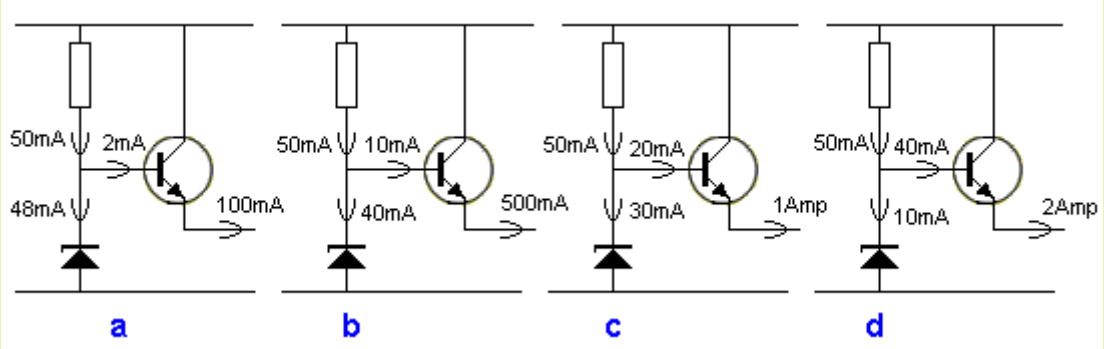

The transistor has a gain of 50

In the circuits above, the output current can range from 100mA to 2Amp. The zener will pass 48mA when the load is 100mA and drop to 10mA when the load is 2Amp.

If the output requirement is only from 500mA to 1Amp, the value of the dropper resistor can be changed so the zener takes 20mA when 500mA output current is required and 10mA when 1 amp is required.

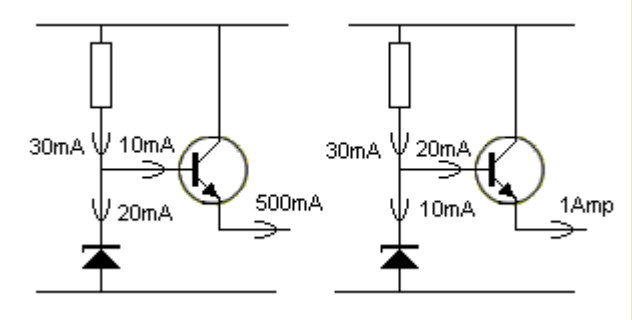

When designing this type of circuit, the zener is allowed to take 10mA when the maximum current is required. The 10mA is about the minimum current for a 12v (300mW to 500mW) zener to keep it in conduction. The actual minimum value depends on the wattage of the zener and also its voltage. You will need to look at the specification sheet for the zener you are using.

The term "keep it in conduction" means this: Suppose we have a 12v zener and dropper resistor connected in series. As the voltage (the SUPPLY VOLTAGE) on the combination is reduced, the current through the

zener reduces. If you supply the combination with 11.5v, the zener will "fall out of conduction" and it will appear like a very high value resistor or even an infinite resistance.
In the transistor / zener regulator circuit above, if the current taken by the load increases above 1Amp, the current into the base increases and when it reaches 30mA, the zener receives NO CURRENT.
Any further increase in current by the load causes more current to flow through the Dropper Resistor and the voltage across this resistor will increase. This will lower the voltage on the base and also lower the voltage on the emitter. At this point the zener has dropped out of regulation.

If the transistor has a gain of 50, the maximum output current is divided by 50 and this gives the base current of 20mA.
Add 20mA to 10mA to obtain the current through the Dropper Resistor.
The value of resistance for the Dropper Resistor is obtained by the formula:

$$R = \frac{\text{voltage of supply - voltage of zener}}{\text{current through Dropper Resistor}}$$

Suppose the supply is 15v and the zener is 12v . The value of the Dropper Resistor is:

$$R = \frac{15v - 12v}{0.03\ \text{Amp}} = \frac{3}{0.03} = 100R$$

The output voltage is 0.7v less than the voltage of the zener.
The following diagram shows an example of the voltages on a typical regulator circuit:

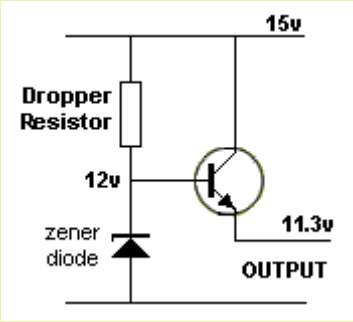

The voltages on the regulator circuit

SUMMARY

A power transistor can be used to amplify the characteristics of a zener. That's what the circuit above is doing.
The circuit is sometimes drawn as shown in the following diagram. It is more difficult to see exactly how the circuit is operating, but this is how it is drawn in many projects. By drawing the circuit as shown above, you can see the voltages on each section of the circuit and you can't make a mistake. One "circuit engineer" said the output was 1.2v above the input voltage. But when you draw the circuit as suggested, you can clearly see this is not possible.
That's why the layout of the circuit is MOST IMPORTANT.

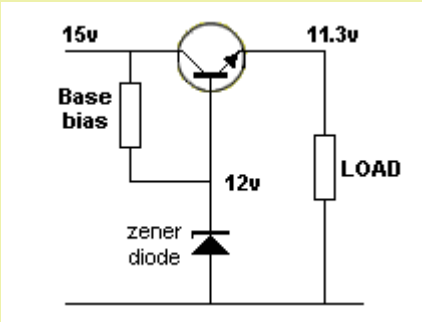

The regulator circuit re-drawn

IMPROVING THE SMOOTHNESS OF THE OUTPUT

The quality of the output (meaning the smoothness of the output) of a regulator - also called the smoothness of a POWER SUPPLY - can be improved by adding a transistor that detects any increase or decrease in the the output voltage and produces an opposing signal to counteract the rise or fall. The end result is very smooth DC.
The action of this transistor is called **NEGATIVE FEEDBACK**.
In the regulator circuit above (and the circuit with the transistor amplifier), the output is not being monitored and if the zener is noisy, (in other words it breaks down in an irregular mode and creates ripple) there is no feature to detect the changes, and reduce them.

The following circuit uses a transistor to detect the output voltage and provide a feedback signal (feedback voltage) that will eliminate the ripple. It is called a **FEEDBACK SIGNAL** or simply **FEEDBACK**.
The zener diode can be removed and two resistors used to monitor the output voltage with the voltage at their join being passed to the feedback transistor.
The base-emitter voltage of the transistor replaces the zener diode as a "reference" and the transistor turns into a zener diode with the "zener reference" appearing between the collector and emitter.

The following circuit shows the feedback transistor replaces the zener diode in the circuit above and two VOLTAGE DIVIDER resistors on the output are connected to the base of the feedback transistor.

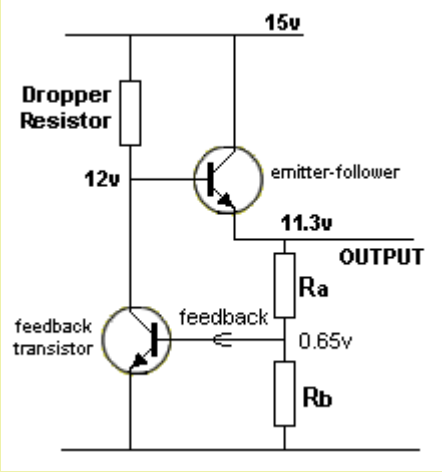

When the circuit turns ON, the output voltage rises until the voltage at the join of the resistors reaches 0.65v. The feedback transistor starts to turn ON and prevents the base of the emitter-follower transistor rising above 12v. This creates an output voltage of 11.3v.
Any reduction in the output voltage will turn off the feedback transistor a very small amount and it will allow the voltage on the base of the emitter-follower transistor to rise and this will increases the output voltage.
The feedback transistor is also called an **ELECTRONIC FILTER**.
It has an effect equal to the gain of the transistor (approx 100) on smoothing the output.

HOW DO YOU WORK OUT THE RESISTOR VALUES?

For the resistor values for the following circuit, we start with Ra and Rb.
The output current is 1amp and the transistor can handle more than 2 amps, so the gain at 1amp is 100.
The feedback transistor also has a gain of 100, but this is not important for these calculations.
Starting with Ra and Rb, we allow 10mA to flow though this voltage divider so the stability of the circuit is very high.
The resistance of Rb = 0.65/.009 = 72 ohms.
The resistance of Ra = 10.65/0.01 = 1.065k

The resistance of the dropper resistor = 3/0.01 = 300 ohms

The circuit turns on via the 300 ohm dropper resistor pulling the base UP. As the output voltage rises, a point is reached where the voltage into the feedback transistor reaches 0.65v and the transistor turn ON. **It turns into a resistor** and the join of this "resistor" and the Dropper Resistor create a voltage of exactly 12v. At this point the circuit becomes stable.

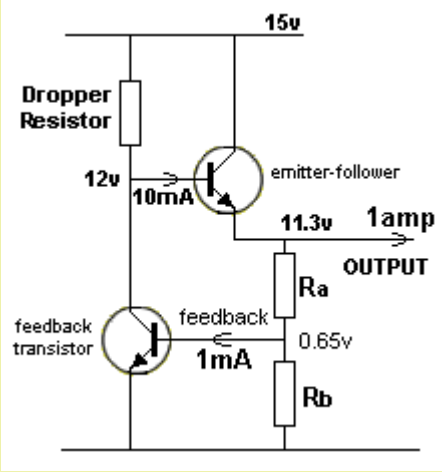

Ra and Rb can be any values providing the ratio is 72:1065. For instance, the values can be 144:2130 or 108:1597 (where the values are increased by 50%).
The value of the **Dropper Resistor** can be any value **less than** 300R and although this will theoretically allow more current to enter the base of the emitter-follower transistor, the transistor will not take any more current than it requires to create the necessary collector-emitter current (and thus the exact voltage of 12v at the collector).

TRANSISTOR GAIN

As the current through a transistor increases, the gain of the transistor decreases. This means a transistor may have a gain of 100 when a small current is flowing thorough the collector-emitter circuit, but as the current increases to say say 50% (of the maximum allowed for the device), the gain may decrease to 50. As the current increases to a maximum, the gain may decrease to 20.
All these values are variable and we cannot specify any exact values, so you have to remember to takes these facts into account when designing a circuit.
That's why a transistor with a maximum collector current of 4 amps is chosen for a circuit requiring 1 amp. You are not over-stressing the transistor and it will provide a gain of about 100.

THE ELECTRONIC FILTER

Here is a simple circuit to reduce the ripple from a power supply by a factor of about 100. This means a 20mV ripple will be 0.2uV and will not be noticed. This is important when you are powering an FM bug from a plug pack. The background hum is annoying and very difficult to remove with electrolytics. This circuit is the answer. The 1k and 100u form a filter that makes the 100u **one hundred times** more effective than if placed directly on the supply-line. The transistor detects the voltage on the base and also detects the very small ripple.
As current is taken by the load, about 100th of this current is required by the base and if the load current is 100mA, the current into the base will be 1mA and one volt will be dropped across the 1k resistor.
The circuit is suitable for up to 100mA. A power transistor can be used, but the 1k will have to be reduced to 220R for 500mA output. The output of the circuit is about 2v less than the output of the plug pack.
By adding a zener across the electro, the output voltage will remain much more constant (fixed). If a zener is not added, the output voltage will drop as the current increases due to a factor called REGULATION. This is the inability of the small transformer to provide a constant voltage. The addition of the 3 components only reduces the RIPPLE portion of the voltage - and does not change the fact that the voltage will droop when current is increased. It requires a zener to fix this problem.

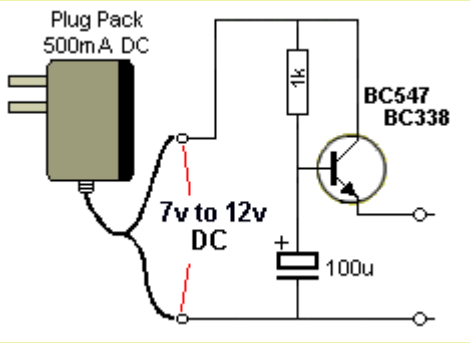

An ELECTRONIC FILTER

THE ELECTROLYTIC AS A FILTER

The circuit above shows an electrolytic used to remove the ripple from a power supply.
1. How does the electrolytic reduce the ripple?
2. Why do you need a larger capacity electrolytic for a higher current?

1. The electrolytic is just like a rechargeable battery.
When the voltage is higher than normal, the electrolytic gets charged and this puts an additional load on the supply. Some of the extra voltage (as well as the current being delivered by the supply-voltage) is passed to the electrolytic as energy and the supply voltage is reduced slightly.
When the supply-voltage drops, the voltage contained in the electrolytic is slightly higher than the supply and it delivers energy. This prevents the supply-voltage dipping too much.
You can see the electrolytic is receiving and delivering only a very small amount of its stored energy and that's why its value must be very large (about 1,000u for each amp delivered by the power supply). This is because the electrolytic has to have a large ability to store a lot of energy when the voltage rise and falls only a very small amount.
2. When the current is a large value (say 1 amp), the energy contained in a few millivolts and a current of 1 amp, is a very large and thus a high capacity electrolytic is needed.

When an electrolytic is placed across a power rail, it smoothes the voltage by BRUTE FORCE. A large electrolytic will produce more smoothing.
But when the electrolytic is connected to the supply via a resistor, the electrolytic will take time to charge when the voltage rises and time to discharge when the voltage fall.
This means the ripple on the electro will be much less than the ripple on the power rail.
Depending on the value of the resistor and electro, it may be 1/100th of the ripple on the supply.
The transistor detects this improved voltage and allows a high current to pass to the load.

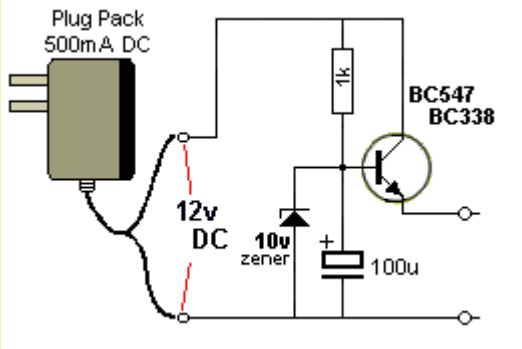

The zener improves the circuit enormously

The addition of a zener diode improves the output of the circuit enormously. When the circuit delivers current, the voltage will "sag" and sometimes the voltage will drop to 11v. If we include a zener, we will only be delivering a voltage of 10v minus 0.7v = 9.3v and this voltage will will NEVER have any ripple (in it).
Thus this voltage will never have any "hum."

THE TRANSISTOR AS A LOAD

This might seem an unusual topic but many circuits use a transistor as a LOAD or VARIABLE LOAD or partial load (in conjunction with a LOAD RESISTOR) to dissipate (remove - take away) power - to prevent another item (such as battery) being overcharged or a delicate device getting too hot.
We are talking about wasting energy or losing energy in the form of heat to prevent another item in a circuit getting too hot.
A power transistor such as 2N 3055 is ideal for this purpose however there are smaller power transistors for smaller losses.
We use the gain (amplification factor) of the transistor to provide this feature and by controlling the base current, the current though the collector-emitter terminals can be adjusted. In most cases the transistor is in series with a LOAD RESISTOR and the two items can be adjusted to remove unwanted energy.
In addition, the percentage dissipated by the transistor compared to the load resistor depends on the base current of the transistor.
This is quite a complex topic as the losses can be adjusted to any percentage, irrespective of the supply voltage.

This is sometimes called an **ELECTRONIC LOAD** or **ACTIVE LOAD** because the effectiveness in dissipating heat can be controlled by current entering the base of the transistor.
A POWER RESISTOR (by itself) is called A DUMMY LOAD or STATIC LOAD. It's dissipation is fixed

(providing the voltage of the supply is fixed).
Our discussion introduces a variable dissipation, controlled by the base current of a transistor.
This is another example of a transistor being used as an amplifier. The current into the base is amplified by the transistor to produce a current through the collector-emitter leads.
This current also flows through a LOAD RESISTOR and the resistor increases in temperature.
The loss in the transistor and resistor is calculated in terms of watts and when this is extended over a period of time, the result is energy - watt-hours. This energy is given off as heat instead of raising the temperature of a critical component in a circuit.

The following diagram shows the heat dissipated in the transistor when maximum, medium and low current flows into the base of the transistor:

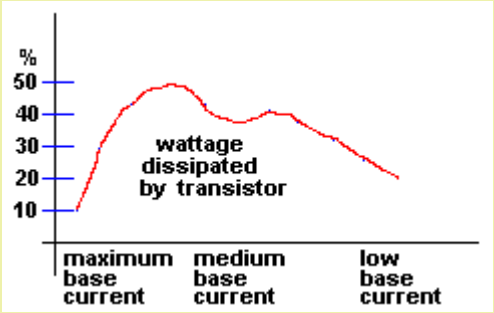

When maximum base current is supplied to the transistor, it is turned ON fully and only about 10% of the total wattage is lost in the transistor. This means the total wattage of the load can be very high.
As the current is reduced, the wattage dissipated in the transistor increases to about 50%, then drops off.
The following diagram shows a large wattage will be dissipated in the resistor (and very little via the transistor) when maximum current is supplied to the base of the transistor, but as the base current is reduced, the size of the load must also be reduced because more of the load is dissipated in the transistor (and the transistor is the limiting factor).

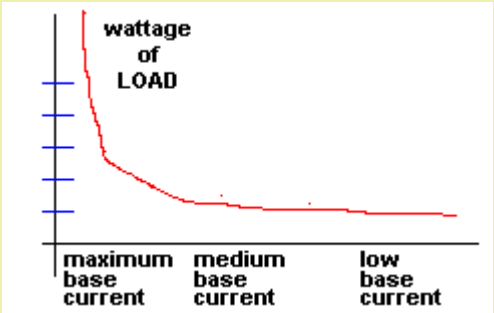

It is impossible to work out the "load sharing" between the transistor and resistor for any given base current because transistors from different batches have considerably different characteristics.
The diagrams we have provided show percentages but not the base current required to create the load sharing.
Even simulation software will produce false data as the actual characteristics of the transistor you are using will be unknown.
Rather than spending time on trying to work out the probable results via a software package, it is much easier to build the circuit and apply current to the base.
As you apply current into the base, you can monitor the current through the load via an ammeter and provided the transistor is correctly heatsinked, it will not overheat.
A 2N3055 will dissipate 115 watts using a very large heatsink. This gives a starting-point for the maximum wattage for the system.
When the transistor is turned on so it dissipates the same wattage as the resistor, the total losses for the system can be as high as 230 watts, but when the transistor is fully turned on, the system can handle about 1,0000 watts.
However the transistor must change very quickly from a state where it is not turned to a fully turned-on-state. (If not, the transistor will be damaged very quickly if it becomes partially turned on.)
In the fully-turned-ON state, the transistor is fully saturated and is dissipating only about 10% of the total load and the resistor is dissipating about 90%.

These are all points you need to know, when designing an **ACTIVE LOAD**.

THE TRANSISTOR AS AN INVERTER

A transistor can be configured as an inverter - to change a signal (that moves from LOW to HIGH) into a signal that changes from HIGH to LOW.
This type of circuit can be used to transform a 0-5v signal into a 0-9v signal. This is called **VOLTAGE SHIFTING** or **LEVEL SHIFTING**. In this case, a LOW to HIGH (0-5v) signal is converted to a "HIGH to LOW" (0-9v) signal. The output changes when the base sees a voltage between 0.55v and 0.7v. The remaining input voltage is dropped across the base resistor. The output voltage will be initially HIGH and go LOW as soon as the input voltage reaches about 0.7v.

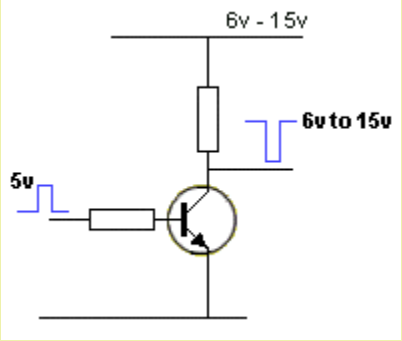

5v to 15v Inverter

A non-inversion circuit is shown in the following diagrams:

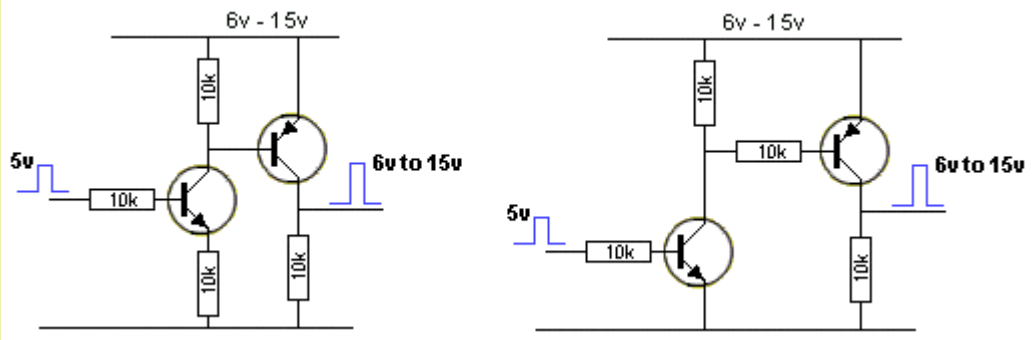

5v to 15v Non-Inverter

The following circuit does not work because the second transistor is never turned off. Both transistors MUST be connected to the high voltage rail.

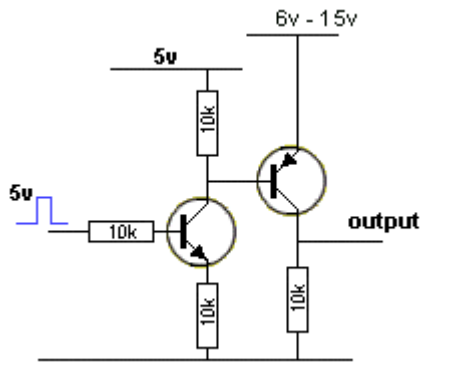

This circuit does not work

The following circuit converts a signal that starts as **5v HIGH** and goes **LOW**. During this signal transition, the output start with a **LOW** value and goes **HIGH**.

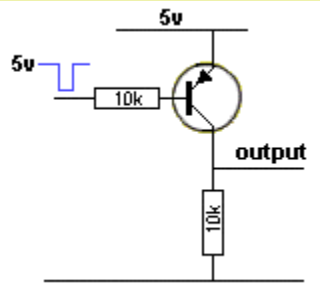

5v to 0v Inverter that produces 0v to 5v Output

The following circuit is a Push-Pull Inverter:

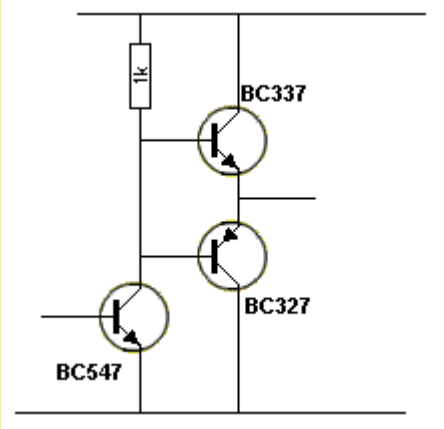

Push-Pull Inverter

All the circuits above convert an analogue signal or A DIGITAL SIGNAL into a digital signal. This is due to the gain of the transistor. In other words the output does not respond in a linear manner, (to the input voltage). The output changes when the input moves from a voltage of about 0.55v to about 0.7v. Input voltages below 0.55v have no effect and voltage above 0.7v do not affect the circuit as the circuit has already changed state.
One other characteristic of the circuit is this: It speeds up the waveform and removes noise from a noisy signal.

ADDING A TRANSFORMER

One of the most complex electrical/electronic components is the TRANSFORMER. It is the simplest component and yet it produces the most complex effects. A transformer is simply a coil of wire placed near another coil of wire. The results and effects will amaze you.
There are so many different effects, we could write an eBook.
In fact we will write a chapter on the subject, but firstly we will cover 5 things:
1. A single coil of wire is not a transformer but an inductor.
Without going into any complex mathematics, here is a fact you should know:
When an inductor is connected to a battery, the current does **not** flow though the turns immediately, but a few microseconds or milliseconds later. This is called **CURRENT LAG**. Don't ask why, it's just a fact.
But the most amazing thing is this: When the voltage is removed, the inductor produces a HIGHER output voltage IN THE REVERSE DIRECTION.
If the coil is wound on a cardboard former, the core (the centre of the coil) is air and the voltage (the reverse voltage) produced, may be twice the supply voltage. But if the core is steel or other magnetic material such as iron (stalloy) or ferrite (a special type of iron) the reverse voltage may be 100 times HIGHER or even 1,000 times HIGHER.
That's why a simple coil of wire is one of the most amazing things.
We can control the magnitude of this reverse voltage by adjusting the frequency and/or the speed at which we turn the voltage OFF.
Even though the inductor is not called a transformer, we are "transforming" a low voltage into a high voltage.
We are not getting "something for nothing." **Conservation of energy still applies**. We are transforming a low voltage at high current into a high voltage at low current. The watts **IN** equals the watts **OUT**.
When we add another winding, the two coils become a TRANSFORMER.
The first winding is called the **PRIMARY** and the second winding is called the **SECONDARY**.
We drive a transformer in a slightly different way to an inductor.

We deliver a rising and falling voltage to it slowly. This is called an AC delivery and although the letters "**AC**" mean Alternating Current, we really mean Alternating Voltage.
When we deliver a slowly rising and falling voltage, the primary does not produce the high reverse voltage discussed above but it does produce a **reverse voltage** that can be as high as 99.99% of the applied voltage. But this is getting away from the point we want to cover.
The secondary winding produces an exact copy of the voltage flowing into the primary and if you measure it on a piece of test equipment, it will follow the primary exactly (but slightly delayed). If you reverse the leads to the test equipment, the results will be a "mirror image." That's how we get a reverse voltage out of the transformer.
Here's the next valuable fact: The voltage from the secondary will be higher if the secondary has more turns or lower if the secondary has fewer turns than the primary.
If it has more turns, the transformer is called a **STEP-UP** transformer and if it has less turns the transformer is called a **STEP-DOWN** transformer.
Here's our last amazing fact:
If the secondary has less turns, the current from the secondary can be higher than the current in the primary. But if the secondary has more turns, the current from the secondary will be less than the current in the primary.
With all these facts and capabilities, we can do incredible things with a transformer.
We forgot to mention one of the most beneficial uses for a transformer. The voltage on the primary is totally isolated from the secondary. In other words, the primary may have 110v or 230v on it and the secondary may have 12v. You can touch either lead of the 12v winding and any metal pipe and not get a shock. The transformer provides total isolation. But if you touch either end of the primary winding and a metal pipe you will be killed instantly.
That's one of the main uses for a transformer - to provide isolation from the "mains." The energy passes from the primary winding to the secondary via **magnetic flux** and the two windings are ISOLATED and INSULATED from each other.
A transformer can be smaller that a grain of rice to the size of a house and there are millions of different types. That's why they are so complex.

As soon as the eBook article is written, it will be included HERE.

A transformer is a complex item. It takes up a lot of space on a PC board and is expensive to make.
It is not added without a reason and a lot of thought.
Here are 8 reasons why a transformer is included in a project
1. To produce a voltage higher than the supply,
2. To produce a very low voltage,
3. To produce a high current,
4. To produce a sinewave wave,
5. To mix two different signals or frequencies,
6. To produce a feedback signal,
7. To produce a number of different, isolated voltages (and/or current),
8. To produce isolation. And many other reasons.

Driving a transformer is not like delivering current to a resistive load.
The primary winding of a transformer has a very small resistance but when it is delivered an increasing voltage, the magnetic flux (produced by the voltage) creates a voltage in the opposite direction that cuts the turns of the winding and this voltage opposes the incoming voltage.
This effectively makes the winding appear to be a higher resistance. When a transformer is delivering energy via the secondary winding, the "back-voltage" produced by the magnetic flux will be less and the input current (via the primary) will be higher.
A transformer is designed to receive an increasing and decreasing voltage. During this time it can deliver energy to the secondary.
But when the voltage rises and remains HIGH, the opposing voltage produced by the expanding magnetic flux ceases and input current increases considerably.

DESIGNING A TRANSFORMER

Designing a transformer is very difficult and complex. The easy approach is to buy a product that contains a circuit similar to your requirement and use the transformer.
It is very difficult to take a transformer apart as the laminations or the ferrite core is dipped or glued or sealed so the windings do not move.
In some cases you can buy laminations or ferrite cores (called pot cores) but there are many different types of materials and unless you know the composition of the material, the resulting transformer can be as low as 10% successful.
The other problem with taking a transformer apart is this:

Many transformers have an air-gap in the magnetic circuit to "remove" or "use-up" the magnetic flux created by the DC component of the input current.
If this air-gap is not maintained in its exact thickness, the new transformer will not be identical in performance to the original.
A transformer without an air gap must have "lapped surfaces" so the two halves of the core touch each other.
All these technicalities will be covered in the eBook.

THE POTENTIOMETER

A potentiometer is simply a resistor with the resistance-material exposed to a wiper.
The resistance-material is called a TRACK and it can be straight or curved. When the track is curved, we generally call it a "pot" (abbreviation for potentiometer) and the pot is rotated to increase or decrease the resistance. When the track is straight we call it a 10-turn pot. And a screw is available on the end of the pot. Straight tracks are also available in pots called SLIDERS. All pot have the same symbol.
In most cases a pot is connected to a circuit with a resistor on one end or on the centre terminal (the "wiper") as shown in the following diagrams:

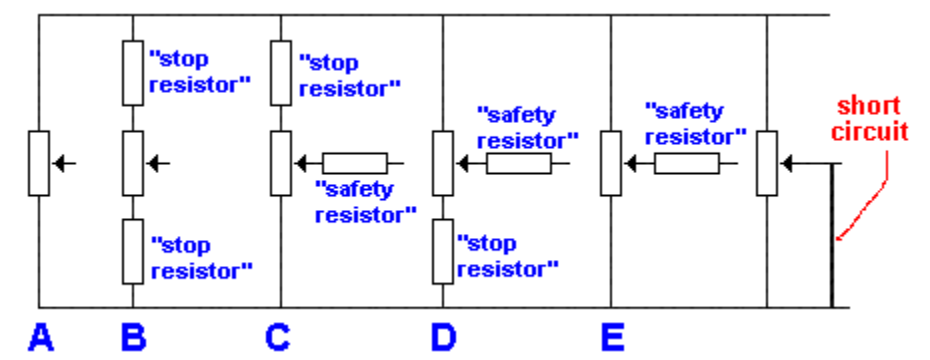

STOP RESISTOR and SAFETY RESISTOR

A resistor added to the top or bottom of the pot is called a **stop resistor**. It stops the pot reaching full rail voltage or 0v. A **safety resistor** is added to the wiper so the pot is not damaged when turned fully clockwise and the resistance of the output is low.
Fig A above shows a pot with no external resistors. The voltage on the wiper can be as high as rail voltage or as low as 0v.
Fig B shows a pot with a resistor to positive rail and one to 0v rail. The voltage on the wiper will not be as high as rail voltage or as low as 0v. By selecting a pot with a particular value and resistors for the top and bottom, maximum and minimum voltages can be set.
Fig C shows a pot with a top resistor. This sets a maximum voltage, while the minimum will be 0v.
Fig D shows a pot with a bottom resistor. This sets a minimum voltage, while the maximum will be rail voltage.
Fig E shows a pot with a resistor on the wiper. The allows the voltage on the wiper to be as high as rail voltage or as low as 0v. The resistor is called a "safety resistor." It prevents the pot being damaged if the output becomes shorted as shown in the last diagram.
If the pot in the last diagram is turned fully clockwise, the wiper will each rail voltage. If the wiper is connected to a low resistance, a high current will flow and damage the pot.
A "safety resistor" will reduce the high current.

There are three reasons why a pot is included in a circuit.
1. To "pick off" a voltage.
2. To deliver a current
3. To "pick off" an amplitude.

"PICKING OFF" A VOLTAGE

The following diagrams show a pot "picking off" a voltage. The pot values have not been shown because we are dealing with the concept of picking off a voltage.
In actual fact the pot will be delivering a current (via the wiper) to the circuit connected to the wiper, but to separate the functions of a pot, we have identified this function as PICKING OFF A VOLTAGE.
The main difference between **Picking Off A Voltage** and **Delivering A Current**, is the value of the pot.
The resistance of a pot for **Picking Off A Voltage** is generally a high value. The term "HIGH VALUE" is relative to the situation.

In Figs F and G you can see the SAFETY RESISTOR and STOP RESISTORS.
The wiper in figure F picks off a voltage from the pot. The pot is the load resistor for the MEL12 Photo Darlington Transistor and although it is delivering a small current to the base of the transistor, this current is very low and that's why we refer to the pot as "picking off a voltage."
The safety resistor in Fig F could be replaced with a stop resistor above the pot.
This change can be done in some circuits and you have to build the circuit to determine if the change can be made.

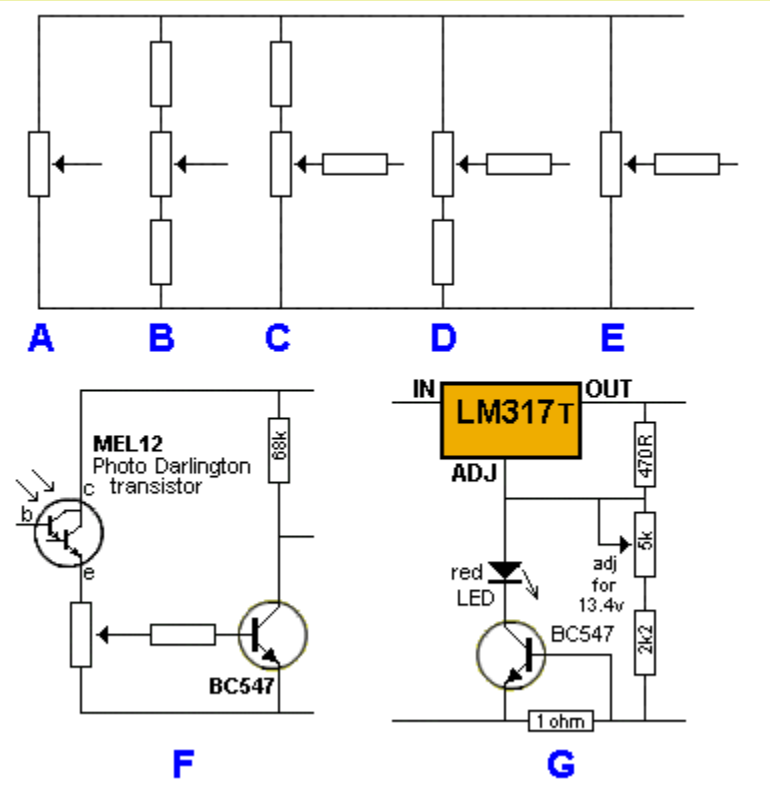

POT RESISTANCE

The resistance of a pot is selected from one of the following values: 100R, 500R, 1k, 5k, 10k, 50k 100k, 1M and 2M.
In most cases you will copy a circuit and use the same value for the pot.
Working out the value is quite a complex task.
Here are three different circuits. The voltage on the top and bottom of the pot is the same, but the value of the resistances is different.
The first circuit is classified as LOW IMPEDANCE. The second is MEDIUM IMPEDANCE and the third is HIGH IMPEDANCE.

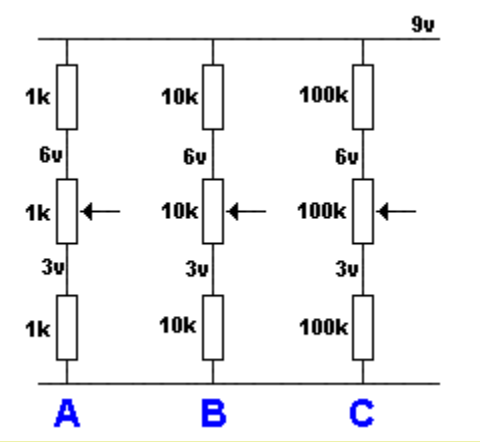

The output from each pot will range from 3v to 6v. So, why different values of resistors?
The reason is to keep the current through the pot as low as possible.
The current through the resistors is WASTED CURRENT. If a project is battery operated, wasted current is

a problem.
The resistance of the load on the wiper also determines the value of the pot.
Let's look at a 10k load connected to the wiper:

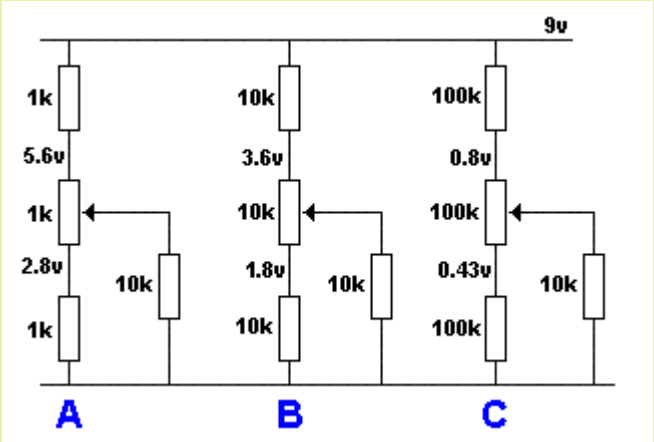

The voltage on the top and bottom of the pot changes when a load is added.
In circuit A, the voltage reduces a small amount as the 10k load has little effect on the low- value resistance of the pot and resistors.
In circuit B, the 10k load has a larger effect on the voltages.
In circuit C the 10k load has a major effect on the voltages.

This means it is necessary to choose values that are acceptable for minimum current through the pot as well as creating the required voltage on the top of the pot.

TRIM POT

A trim pot is simply a pot without a shaft. It usually has a screw-driver slot and is adjusted once in the life of a circuit. It is usually small in size and can be any resistance value to suit the circuit.
It can be connected as the only pot in a circuit or used in conjunction with an ordinary pot to set a particular value or "setting."
It is identified in a circuit as follows:

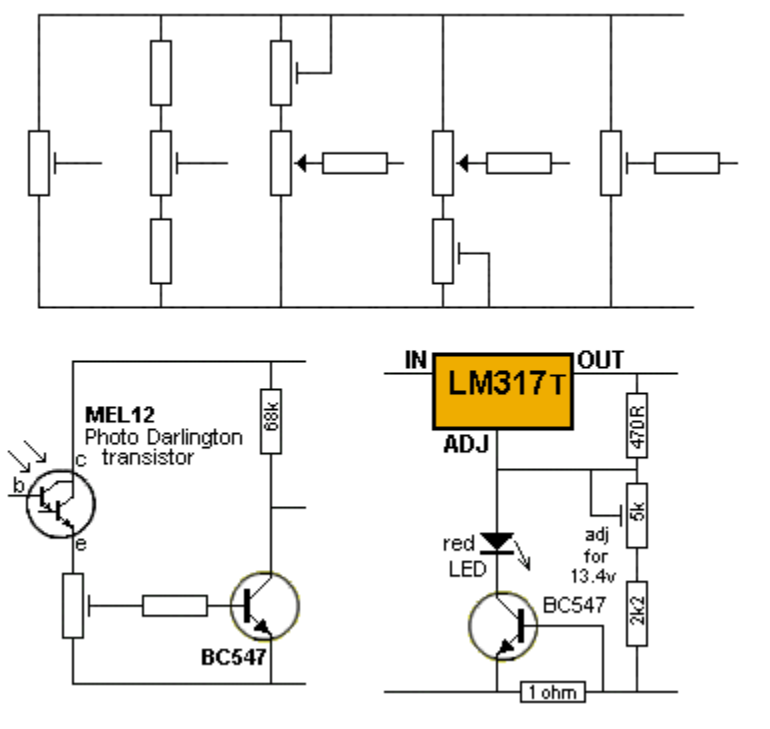

TRIM POTS can be used to trim the value of a POT

THE VOX - Voice Operated Switch

Basically, a VOX circuit is a very high gain amplifier that detects faint sounds and turns on a relay.
Here are a number of voice-operated (sound operated) circuits that turn on a relay or activate a device.
In general, a VOX circuit keeps the relay activated for a short time between sounds so the device remains constantly illuminated or activated.

The first circuit is a CLAP SWITCH. The LED illuminates for 15 seconds after the sound of a clap. For full details of the circuit see Fig 71acd.

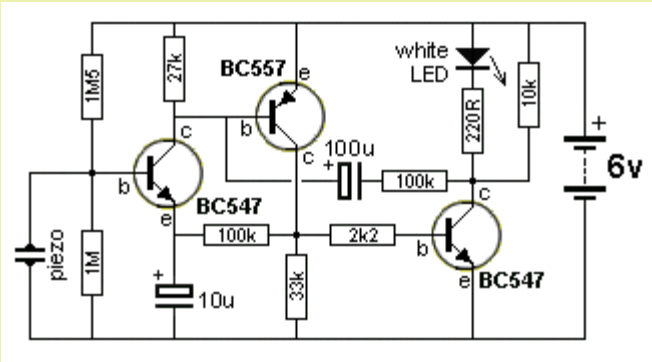

CLAP SWITCH USING PIEZO DIAPHRAGM PICK-UP

The circuit above takes about 20uA when "sitting around." That's because the piezo diaphragm does not require any current.
The same circuit can use an electret microphone for the input but the idle current rises to 200uA.

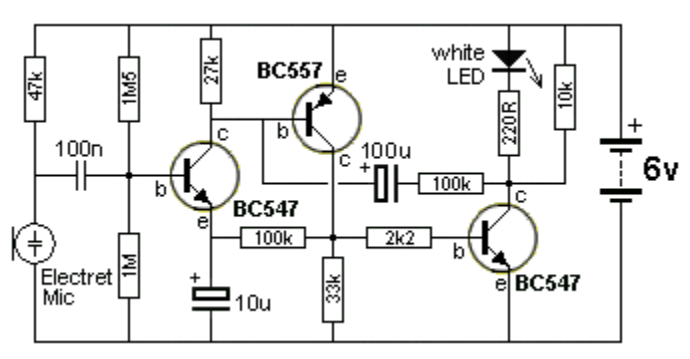

CLAP SWITCH USING ELECTRET MICROPHONE

Both circuits detect a clap but neither will detect faint noises or talking.
The circuits do not keep the LED illuminated constantly but only illuminate for 10 - 15 seconds and turn off for 10 - 15 seconds.

This circuit toggles the LEDs each time it detects a clap or tap or short whistle.

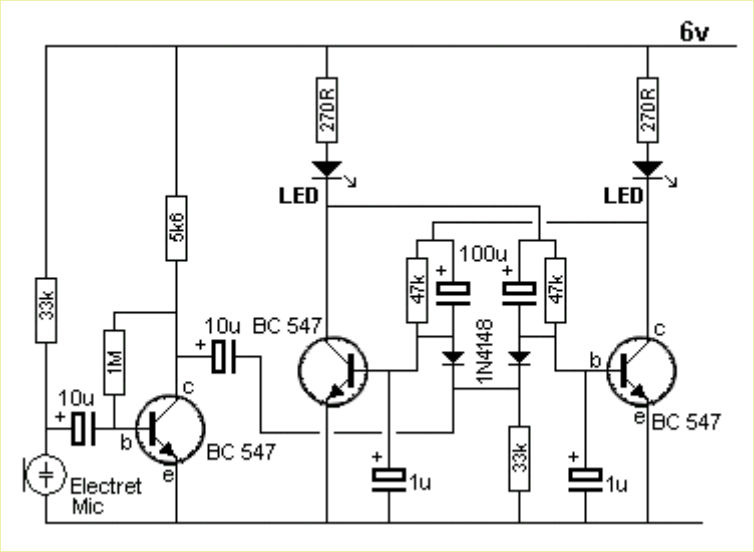

CLAP SWITCH TOGGLES THE 2 LEDS

The second 10u is charged via the 5k6 and 33k and when a sound is detected, the negative excursion of the waveform takes the positive end of the 10u towards the 0v rail. The negative end of the 10u will actually go below 0v and this will pull the two 1N4148 diodes so the anode ends will have near to zero volts on them.
As the voltage drops, the transistor in the bi-stable circuit that is turned on, will have 0.6v on the base while the transistor that is turned off, will have zero volts on the base. As the anodes of the two signal diode are brought lower, the transistor that is turned on, will begin to turn off and the other transistor will begin to turn on via its 100u and 47k. As it begins to turn on, the transistor that was originally turned on will get less "turn-on" from its 100u and 47k and thus the two switch over very quickly. The collector of the third transistor can be taken to a buffer transistor to operate a relay or other device.

The next VOX circuit activates a relay when audio is detected by the microphone. The relay is kept activated for 5 seconds after a silent period, by the 22u, to keep the relay fully activated during normal speech. The circuit takes 0.5mA when "sitting around."

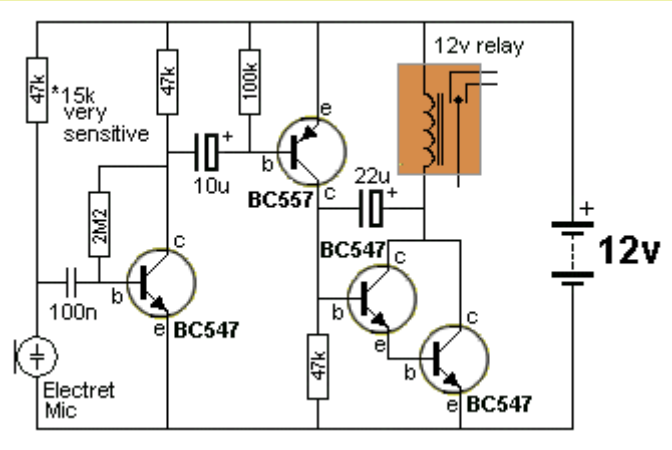

SENSITIVE VOX CIRCUIT

(Good design - circuit takes 0.5mA. Circuit keeps electro charged)

The circuit above is the best design as it uses the least number of components and drives a relay.

The next circuit comes from Engineers Garage website. It uses fewer components but takes more current (about 6mA) in the quiescent mode and does not have any delay to hold the relay ON:

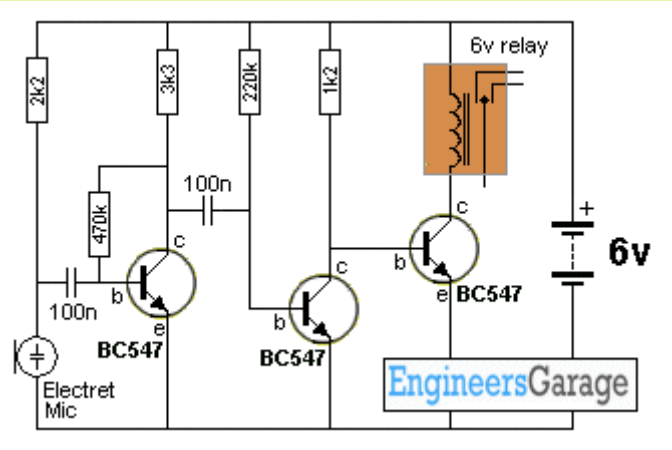

A 6v VOX CIRCUIT - no delay

(Not a good design - circuit takes 6mA)

The following two circuits detect audio and keep the LED illuminated for about 5 seconds. The delay is proved by the 100u capacitor on the output. The output is normally HIGH and goes LOW when audio is detected.
The LED shows the condition of the output. It is removed when you add the circuit to a project.
This circuit is the 12v version. Quiescent current (idle current) is 0.5mA.

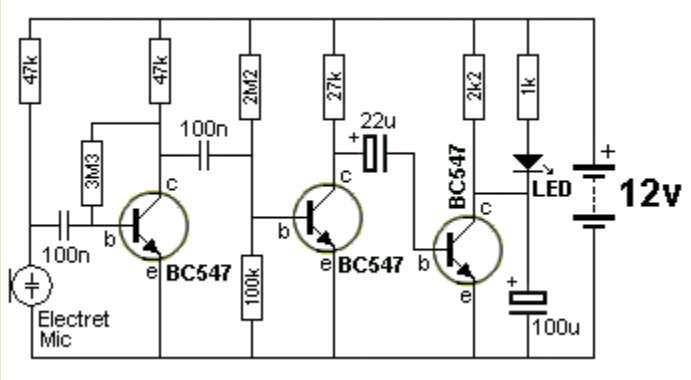

12v VOX CIRCUIT

(Good design - circuit takes 0.5mA. Circuit keeps 100u discharged)

The following circuit is similar to the above. It is the 3v to 6v version. These two circuits detect the slightest whisper. Quiescent current (idle current) is 0.25mA.

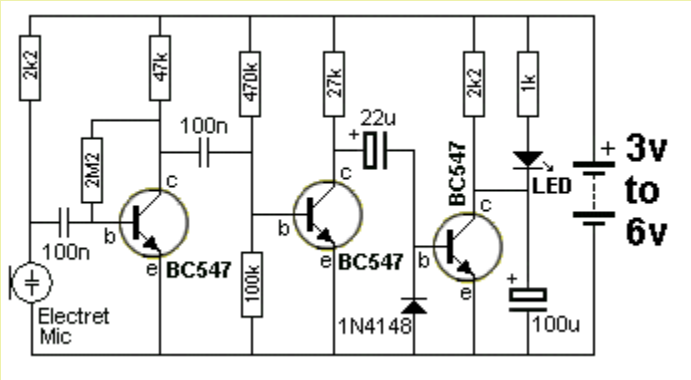

3v to 6v VOX CIRCUIT

(Good design - circuit takes 0.25mA. Circuit keeps 100u discharged)

The addition of the diode in the 3v circuit is needed to discharge the 22u so that it produces its "full effect" to saturate the output transistor when required. It is not needed in the 12v circuit as the base-emitter junction of the output transistor "zeners" at about 5v and this helps to partially discharge the 22u. But when only 3v supply is present, the 22u has a maximum of only a few volt on it and none of its voltage will be removed. The output transistor is turned on when the middle transistor turns off. The 27k pulls the 22u high and if it is discharged, it pulls the base of the third transistor "up" and turns on the LED. During this time it

gets charged slightly and this charging current flows via the base of the third transistor to turn it on.
When the second transistor turns on, the 22u effectively "drops down" and the voltage across it (say 2v) will take the negative lead of the electro BELOW the 0v rail of the circuit. As soon as the negative lead is 0.7v below the 0v rail, the diode comes onto action.
As far as the diode is concerned, it sees a voltage of +0.7v on the anode lead with respect to the cathode lead and current will flow through it to discharge the electro. If the diode is removed, it would take a voltage of about -5v on the electro before it is discharged via the base-emitter junction of the transistor.

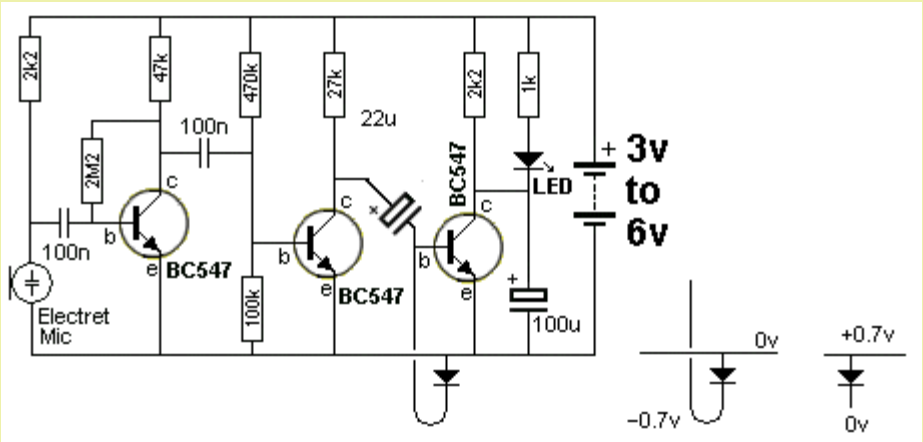

The 22u is discharged via the diode

The next circuit is designed by electroschematic.com. It is not a good design.
The circuit takes 14mA when sitting around and the 470u electro only needs to charge by about 0.5v before the circuit changes state. This uses only a fraction of the possible time delay for a 470u capacitor if the circuit is designed to charge it to a higher voltage before changing state.

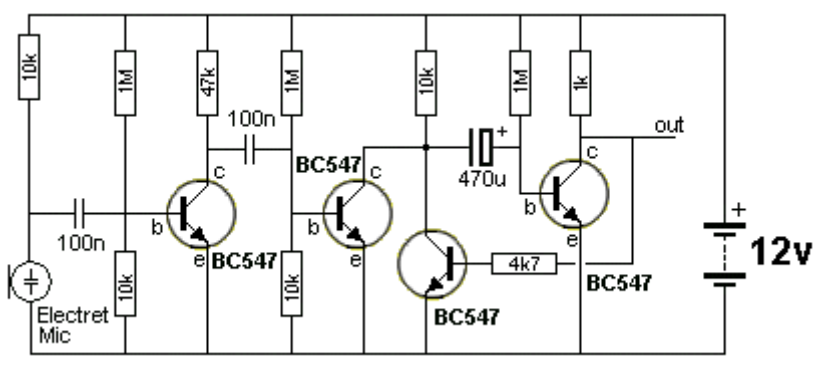

12v VOX CIRCUIT

(Not a good design - circuit takes 12mA)

Here is the circuit re-designed to take less quiescent current (0.5mA) and provide a longer delay with 100u electrolytic (20 seconds).

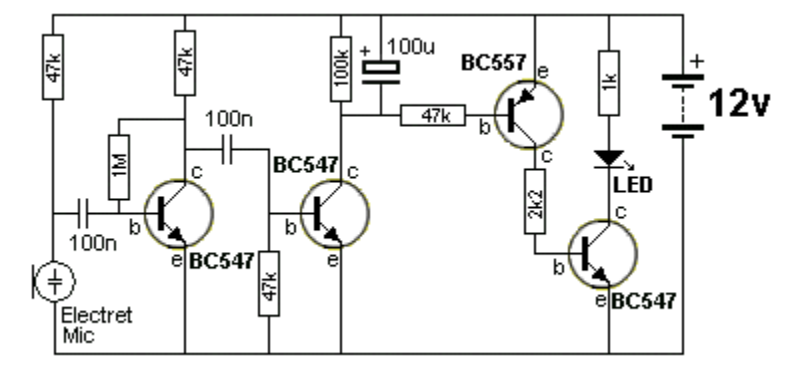

12v VOX CIRCUIT

(Good design - circuit takes 0.5mA.)

The next circuit can be Voice Operated or activated by a Video signal.

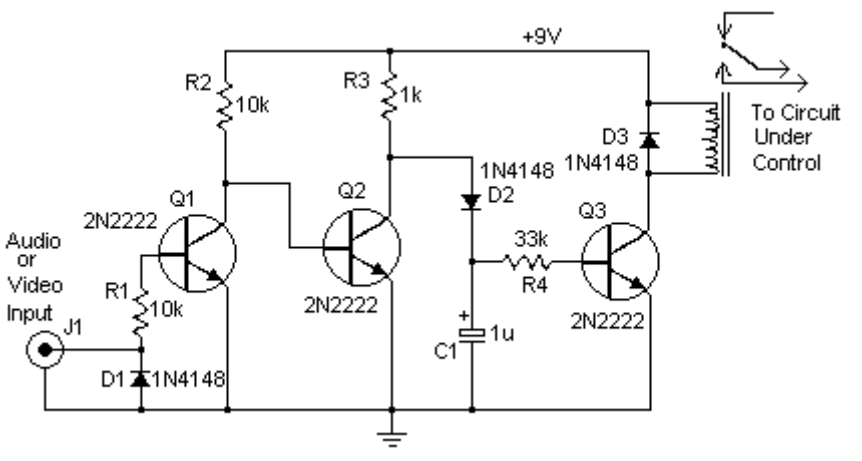

The circuit activates a relay when an audio or composite video signal is delivered to the input. This allows you to use the tuner built into your VCR to turn on and off older TVs that are not equipped with a remote. It can also be used to activate surround-sound equipment, turn off room lights, turn on video game consoles, etc.
When power is applied, the first transistor is not turned on and the second transistor gets turned on via the 10k resistor. This prevents the third transistor turning ON and the relay is not energised.
When an audio or video signal is delivered to the input, the first transistor turns ON and this turns OFF the second transistor. The third transistor gets turned ON via the 1k and diode after the 1u gets charged a small amount.
When the input signal ceases, the first transistor turns OFF and this turns ON the second transistor. The third transistor no longer gets base current via the diode but the 1u holds a small amount of energy and this is delivered to the base to keep the relay active for a short period of time. After this the transistor turns OFF and the relay is de-energised.

The next circuit is a little over-complex and could be improved.
Here are some suggestions:
1. The 10u from the microphone can be as low as 100n without any decrease in performance.
2. The 10k to the base of the first transistor should be a higher value to increase the input impedance of the first stage.
3. The 100u on the emitter of the first transistor can be replaced with a link.
4. The third transistor has a gain of 10. This can be increased by reducing the 1k.
5. The 22k and the two diodes can be removed and the circuit re-designed as shown above.
6. The 4u7 on the base of the 4th transistor is only charging to 0.7v. The delay section needs to be on the third transistor as shown above in the **12v VOX Circuit** and the fourth transistor should be a driver transistor.

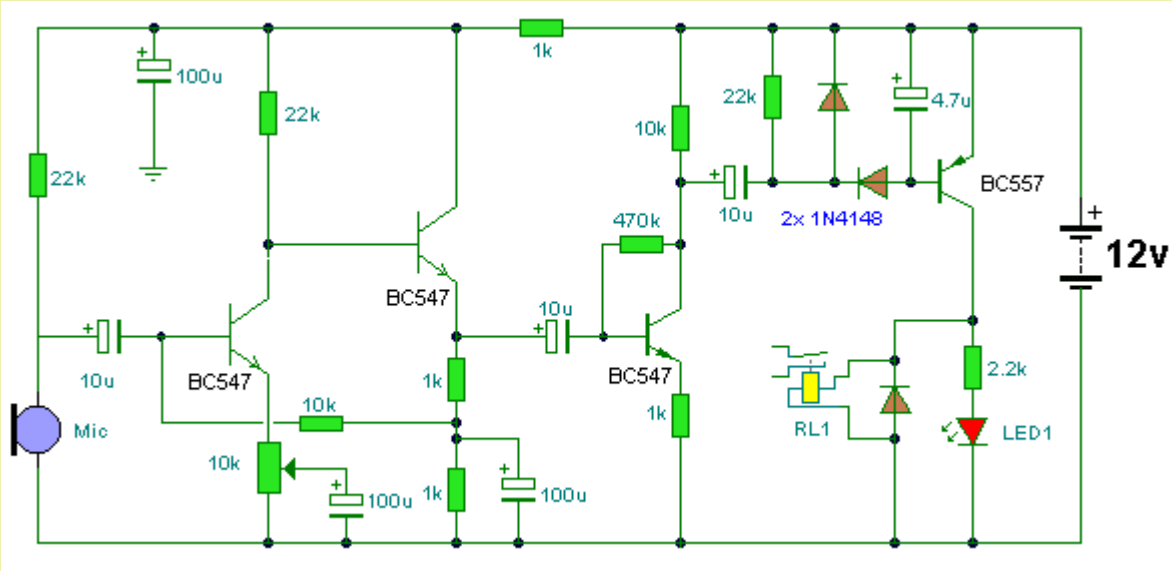

This circuit can be improved

VOX TOGGLE

This clever circuit turns on a motor with a short whistle and turns the motor off with a long whistle. It's a toggle arrangement.

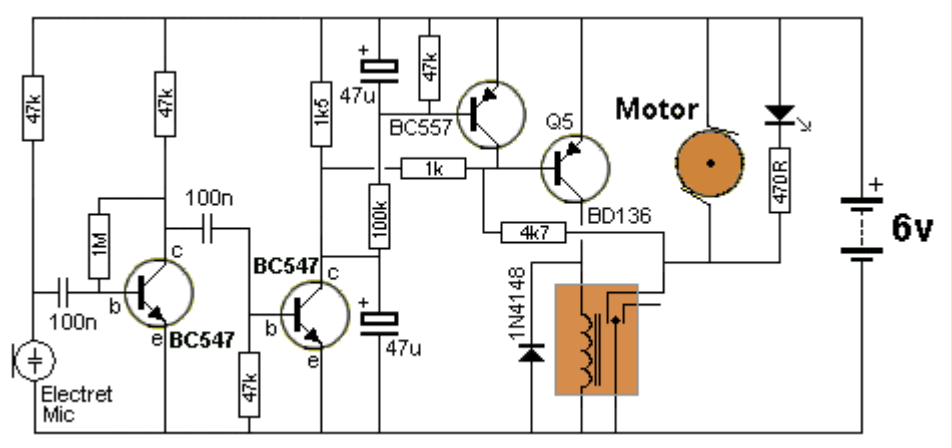

VOX TOGGLE CIRCUIT
Short tone = ON Long tone = OFF

The circuit allows a whistle to turn an appliance ON and OFF by sending a short whistle to turn a circuit ON and a long whistle to turn a circuit OFF.
This is handy when you cannot see the result of your operation. A simple toggle operation is not suitable as you do not know the state of the output at the start of the operation.
By sending a long whistle, you definitely know the output will be OFF and you can then control the output remotely.
A short whistle is less than 0.25 sec and a long whistle can be any length longer than 1 second.
These times can be adjusted by changing the value of the components.
When a short whistle is received, the lower 47u discharges and pulls the base of the BD136 towards the 0v rail and turns the transistor ON. This activates the relay and the contacts take the 4k7 to the 0v rail to keep the transistor ON.
During this time the top 47u charges via the 100k but not enough voltage appears across it to turn on the BC557 transistor.
If the whistle appears for a long period of time, the top 47u charges and turns on the BC557 and the voltage between the emitter/collector terminals is less than 0.3v. This voltage is too low for the BD136 to remain on and it turns off.
When the whistle stops, the BC557 remains on for 1 second and then turns off.
The circuit is then ready to be activated again.

VOICE OPERATED LATCH

The following circuit latches a LED **ON** when sound is detected. It can be used to confirm a certain level of sound has been reached or exceeded during an event.

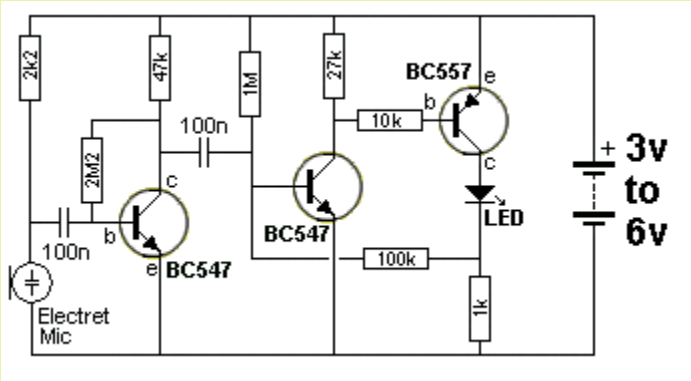

Sound makes LED stay ON

The electret mic and first transistor are active when the circuit is "waiting for a sound" and the 3rd and fourth

transistors are biased OFF due to the 1M and 100k voltage-dividing resistors putting a voltage of between 0.27v and 0.54v on the base of the second transistor. This voltage is not high enough to turn the transistor ON. But the voltage helps to turn the circuit ON when audio is detected and makes it very sensitive.
You can see a poorly designed VOX latch circuit (Called Puff to OFF LED) in our Spot The Mistake eBook.
These poorly-designed circuits show you how NOT to design a circuit and are just as informative as a good design.

ANALOGUE and DIGITAL mode

Now that we have covered more than 100 different circuits, you can see each transistor in a circuit is operating in either analogue or digital mode.
Sometimes it is easy to see the mode of operation.
If a transistor is not taking any current, then gets turned on (hard or fairly hard) it is operating in DIGITAL MODE.
If it is turned on with the collector at or about mid-rail voltage, it is in ANALOGUE MODE.
Understanding these two modes is very important because a transistor in digital mode wastes the least energy. However it cannot amplify a signal that has an amplitude less than 0.6v. It can only amplify a signal that is greater than about 0.7v.
That's why some circuits need both types of stages.
A well-designed circuit takes the least current in quiescent mode.
We have also shown how one stage transfers energy to the next stage via a capacitor. But a capacitor creates losses.
Direct-coupling transfers more energy and has no loss.
When designing a circuit it is best to refer to the circuits covered in this eBook, to prevent designing something that may not work correctly.
We have exposed many poorly-designed circuits in our "**Spot The Mistake**" eBook, as explained above.

CLIPPING AND DISTORTION

Most Analogue circuits require a stage to reproduce a signal as accurately as possible. After all, we don't want an amplifier to be distorted.
However some analogue circuits are designed to distort a signal. Therese can be classified as "EFFECTS" circuits and the most common is a guitar effect called FUZZ. A Fuzz circuit clips a signal so the full amplitude is not delivered to the output.
There are many ways to distort a signal (or process a signal) so a desired effect can be achieved and there are dozens of names for these circuits.
There is no "electronics rationale" behind the design of these circuits and many of them come from experimenting and placing components in unusual places to create positive or negative feedback or overdrive a stage or even under-drive the active component (usually a transistor or op-amp).
There are hundreds of circuits to create these "EFFECTS" and here are some:

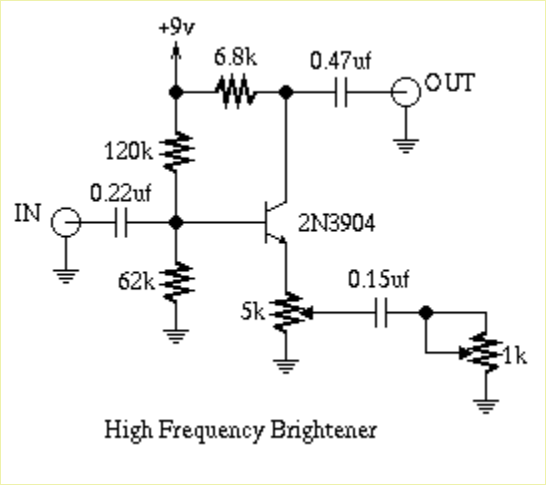

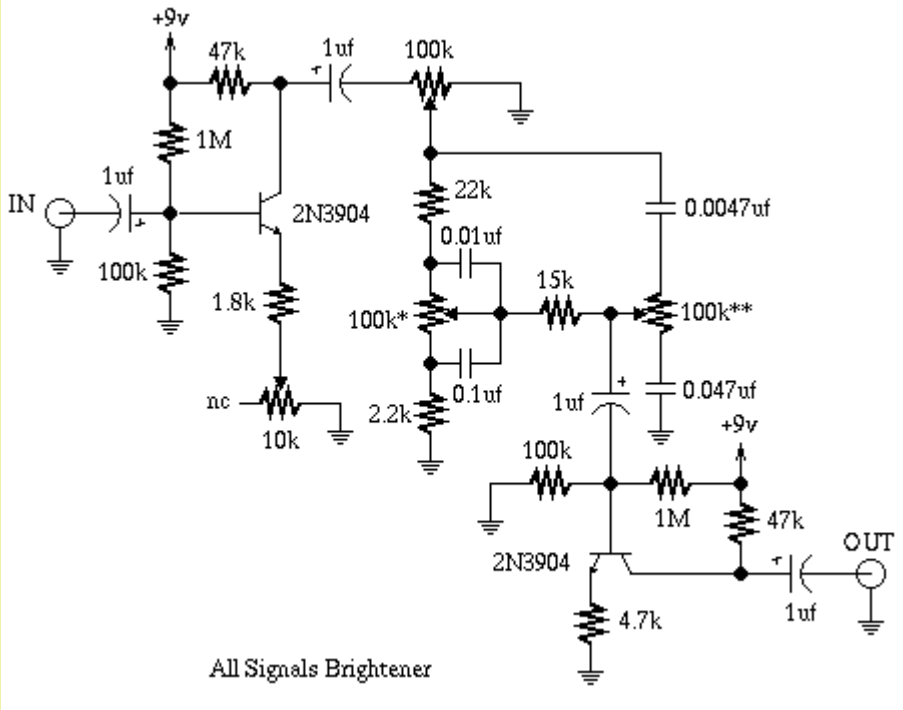
+9v
47k
1uf
100k
1M
1uf
IN
2N3904
22k
0.0047uf
0.01uf
100k
1.8k
15k
100k*
100k**
0.1uf
nc
2.2k
1uf
0.047uf
10k
+9v
100k
1M
47k
OUT
2N3904
1uf
4.7k
All Signals Brightener

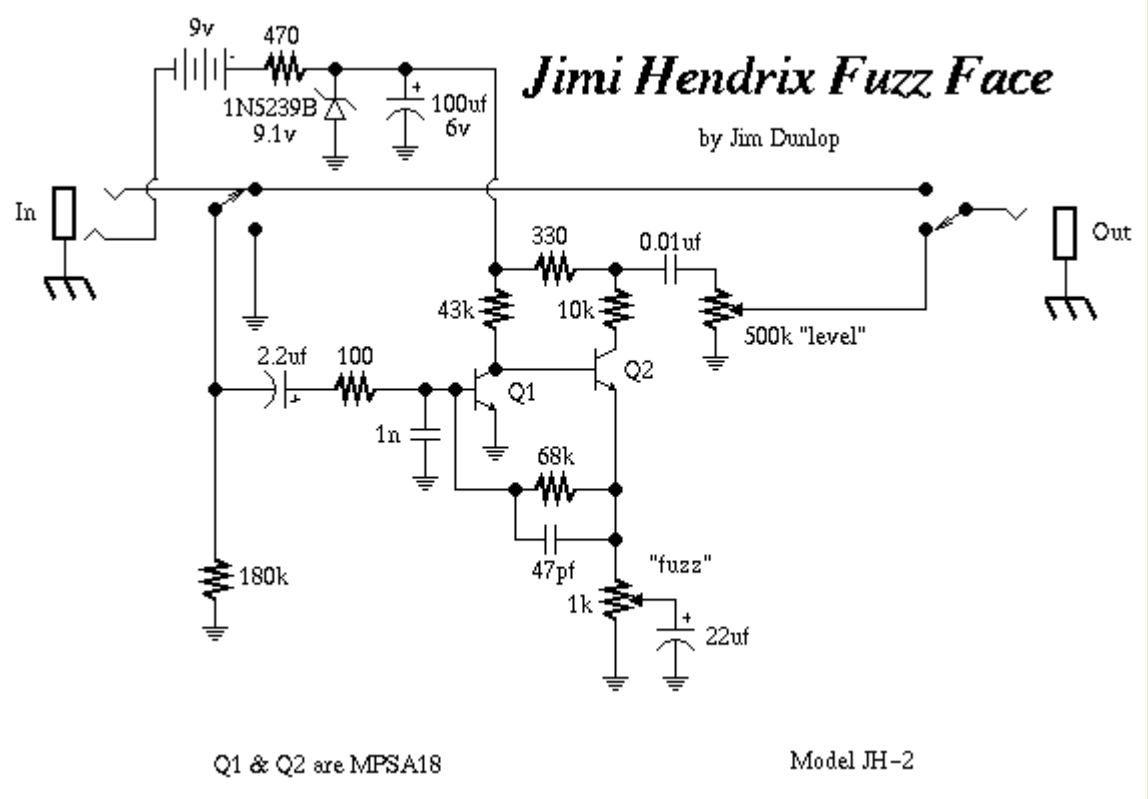
Jimi Hendrix Fuzz Face
by Jim Dunlop
9v
470
1N5239B
9.1v
100uf
6v
In
Out
330
0.01uf
43k
10k
500k "level"
2.2uf
100
Q1
Q2
1n
68k
47pf
"fuzz"
180k
1k
22uf
Q1 & Q2 are MPSA18
Model JH-2

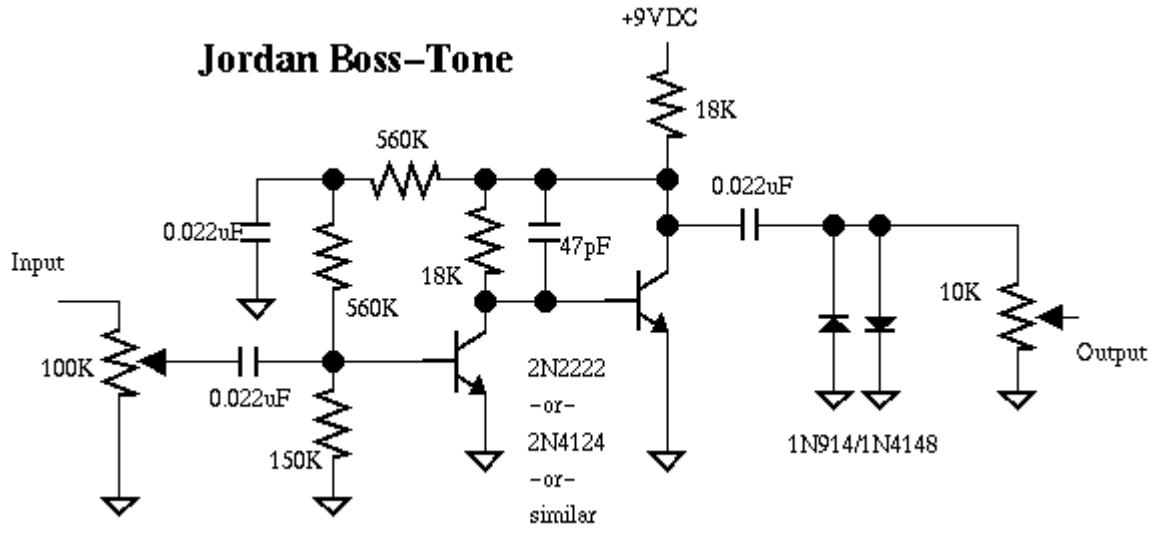
Jordan Boss–Tone
+9VDC
18K
560K
0.022uF
0.022uF
47pF
Input
18K
560K
10K
Output
100K
0.022uF
2N2222
-or-
2N4124
-or-
similar
150K
1N914/1N4148

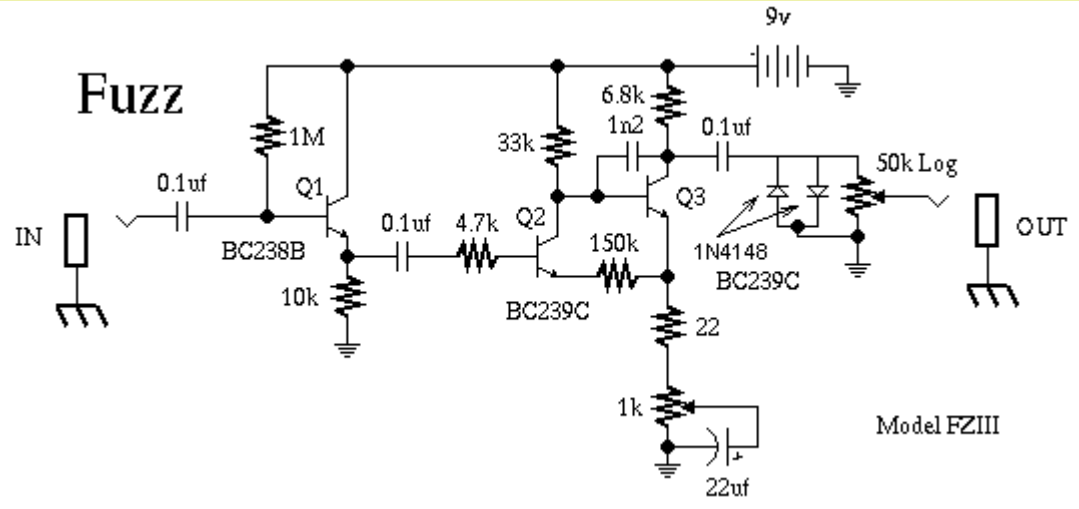
Fuzz
9v
6.8k
1n2
0.1uf
1M
33k
50k Log
0.1uf
Q1
Q3
IN
0.1uf
4.7k
Q2
OUT
BC238B
150k
1N4148
BC239C
10k
BC239C
22
1k
Model FZIII
22uf

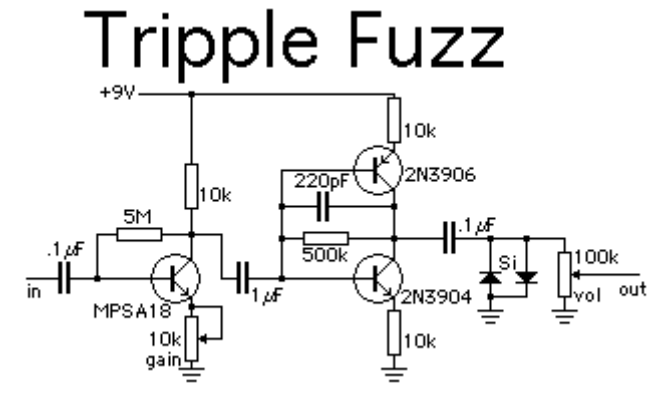
Tripple Fuzz
+9V
10k
2N3906
220pF
10k
5M
.1µF
.1µF
500k
Si
100k
in
1µF
2N3904
vol
out
MPSA18
10k
gain
10k

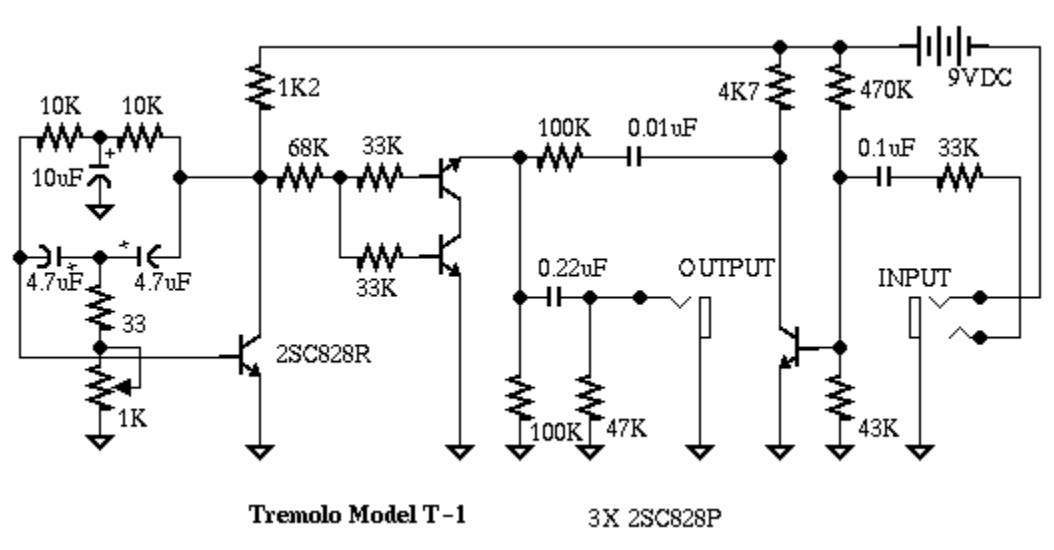
10K
10K
10uF
4.7uF
4.7uF
33
1K
1K2
68K
33K
33K
2SC828R
100K
0.01uF
0.22uF
OUTPUT
100K
47K
4K7
470K
9VDC
0.1uF
33K
INPUT
43K
Tremolo Model T-1
3X 2SC828P

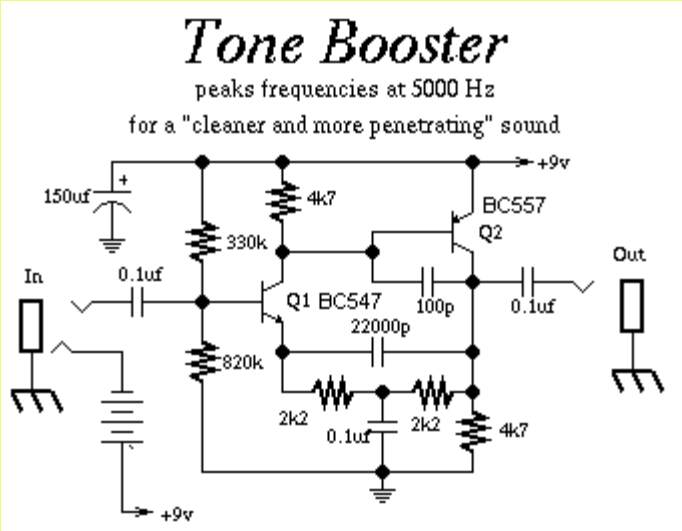
Tone Booster
peaks frequencies at 5000 Hz
for a "cleaner and more penetrating" sound
+9v
150uf
4k7
BC557
Q2
330k
In
0.1uf
Q1 BC547
100p
0.1uf
Out
22000p
820k
2k2
0.1uf
2k2
4k7
+9v

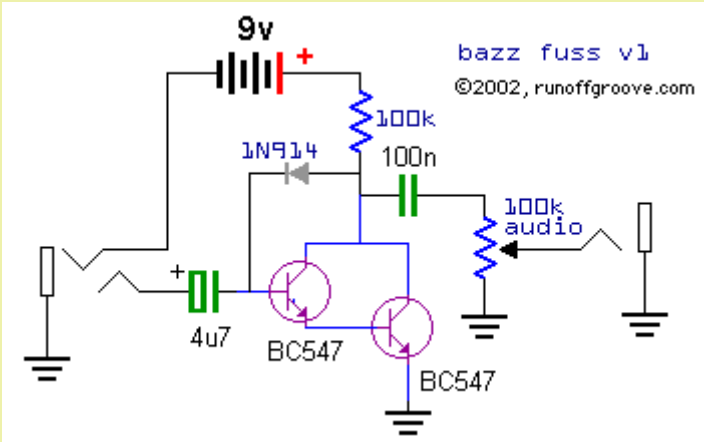
9v
bazz fuss v1
©2002, runoffgroove.com
100k
1N914
100n
100k
audio
4u7
BC547
BC547

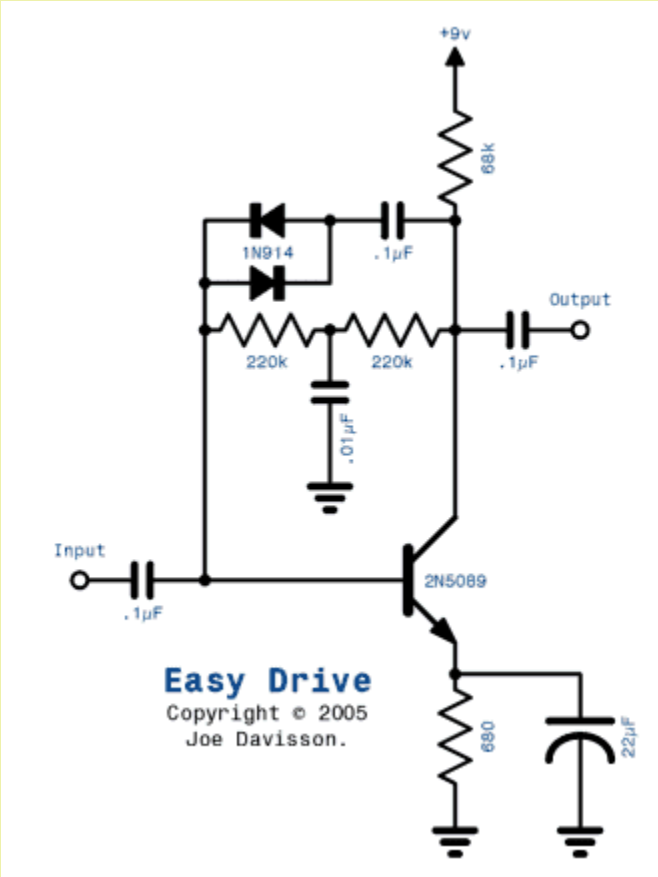

An OVERDRIVE Circuit

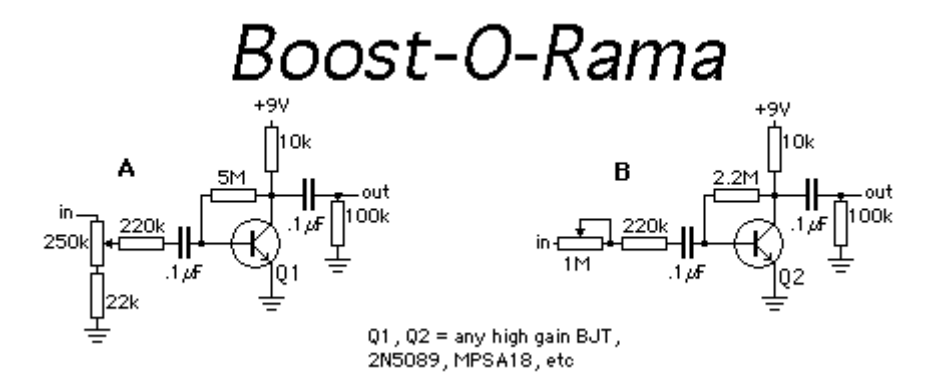

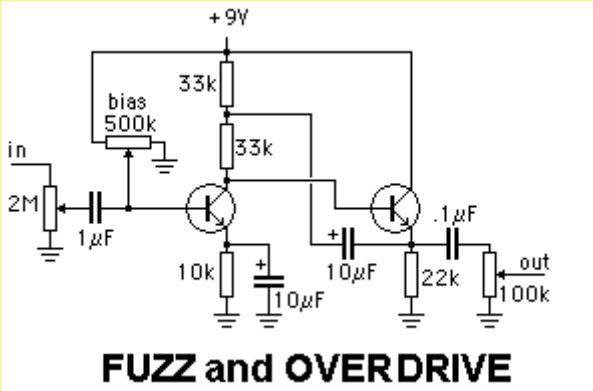

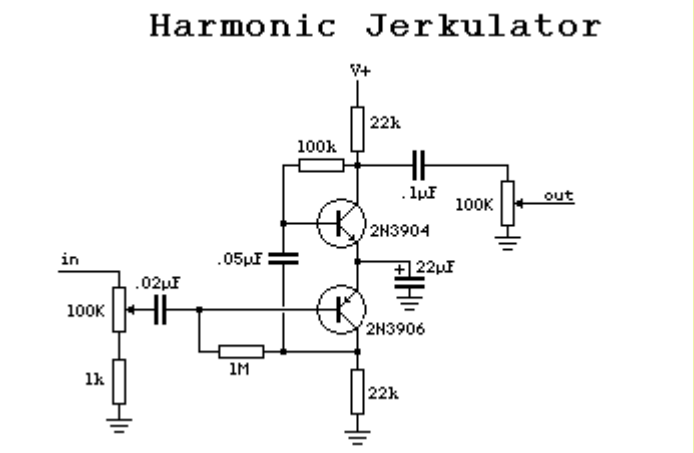
Harmonic Jerkulator
V+
22k
100k
.1µF
100K
out
2N3904
.05µF
22µF
in
.02µF
100K
2N3906
1M
1k
22k

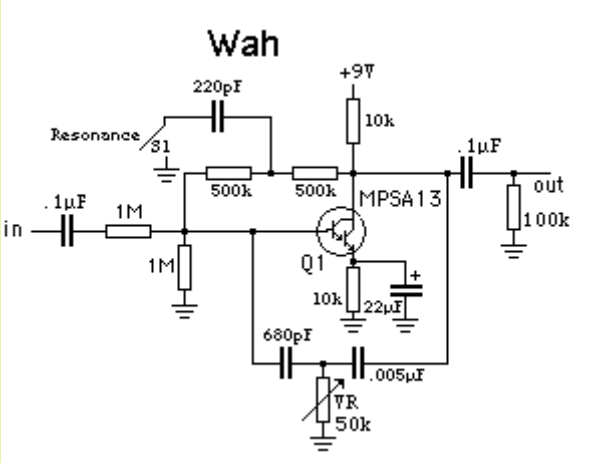
Wah
220pF
+9V
10k
Resonance
S1
.1µF
500k
500k
MPSA13
out
100k
.1µF
1M
in
1M
Q1
10k
22µF
680pF
.005µF
VR
50k

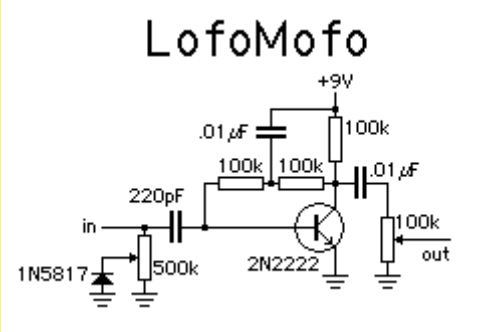
LofoMofo
+9V
.01µF
100k
100k
100k
.01µF
220pF
in
100k
out
1N5817
500k
2N2222

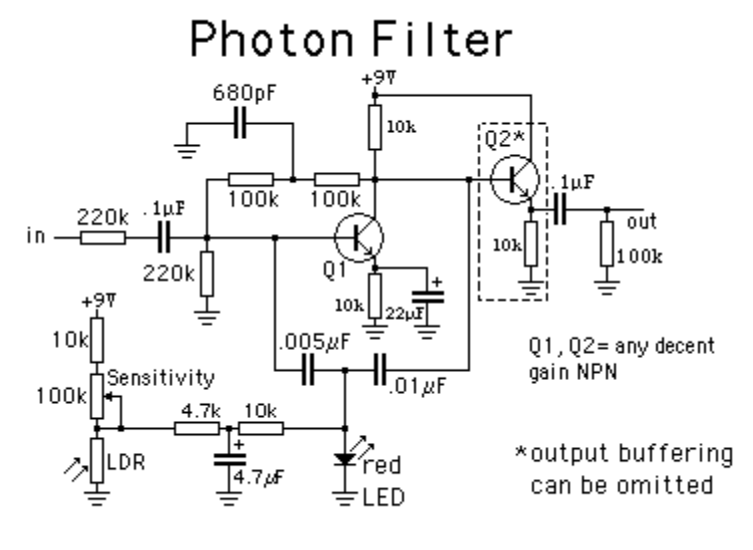
Photon Filter
680pF
+9V
10k
Q2*
100k
100k
.1µF
in
220k
.1µF
out
10k
100k
220k
Q1
10k
22µF
+9V
10k
.005µF
Q1, Q2= any decent gain NPN
100k
Sensitivity
.01µF
4.7k
10k
LDR
4.7µF
red LED
*output buffering can be omitted

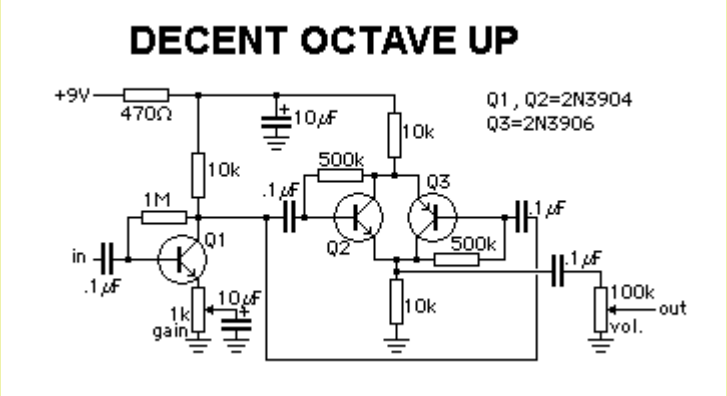
DECENT OCTAVE UP
+9V
470Ω
10µF
10k
Q1, Q2=2N3904
Q3=2N3906
10k
500k
Q3
1M
.1µF
.1µF
Q1
Q2
500k
in
.1µF
.1µF
10µF
1k
gain
10k
100k
out
vol.

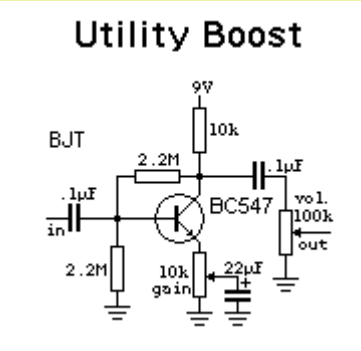
Utility Boost
9V
10k
BJT
2.2M
.1µF
.1µF
BC547
vol.
100k
in
out
2.2M
10k
gain
22µF

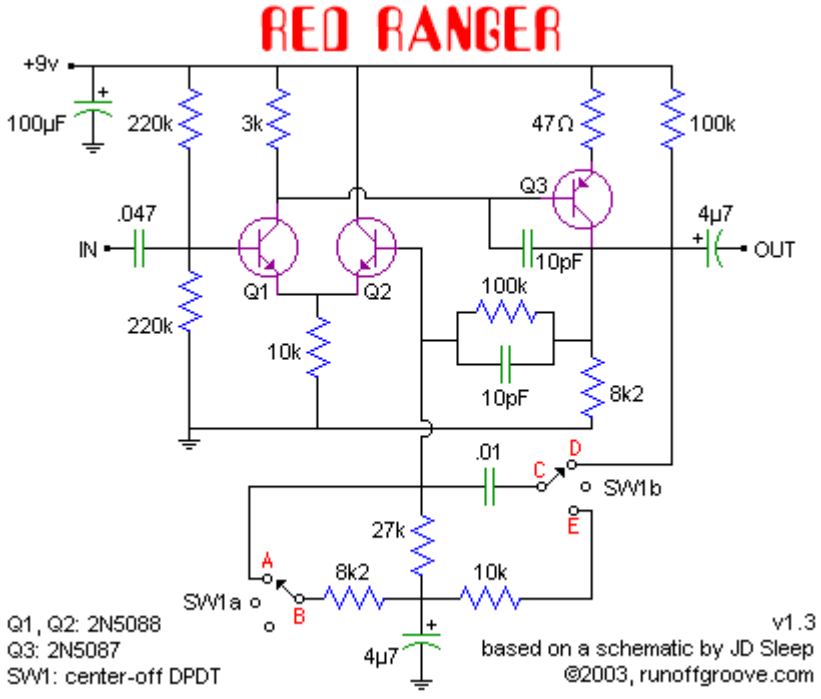
RED RANGER
+9v
100µF
220k
3k
47Ω
100k
Q3
.047
IN
Q1
Q2
10pF
4µ7
OUT
220k
100k
10k
10pF
8k2
.01
D
C
SW1b
E
27k
A
8k2
10k
SW1a
B
4µ7
Q1, Q2: 2N5088
Q3: 2N5087
SW1: center-off DPDT
v1.3
based on a schematic by JD Sleep
©2003, runoffgroove.com

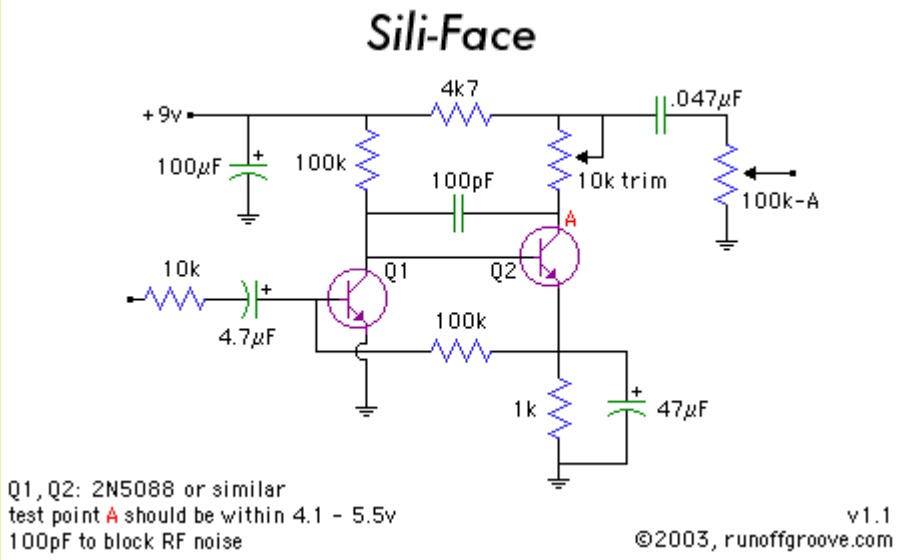

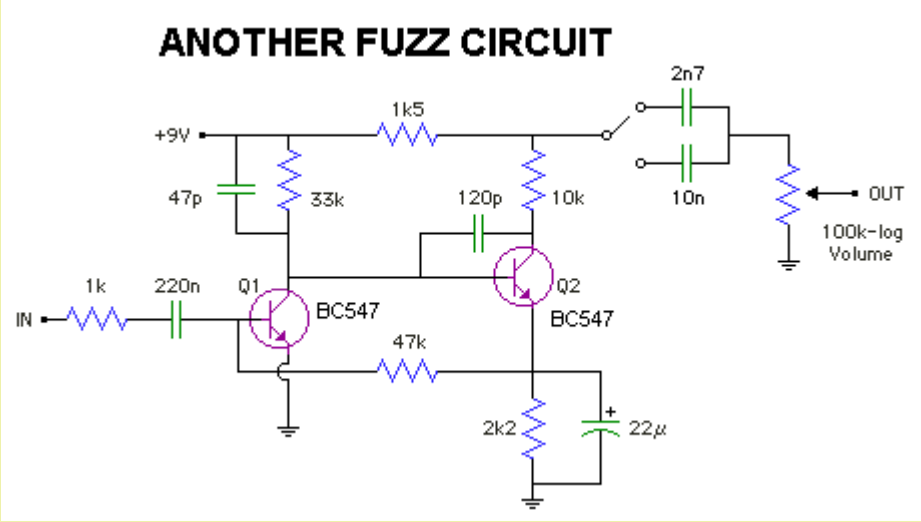

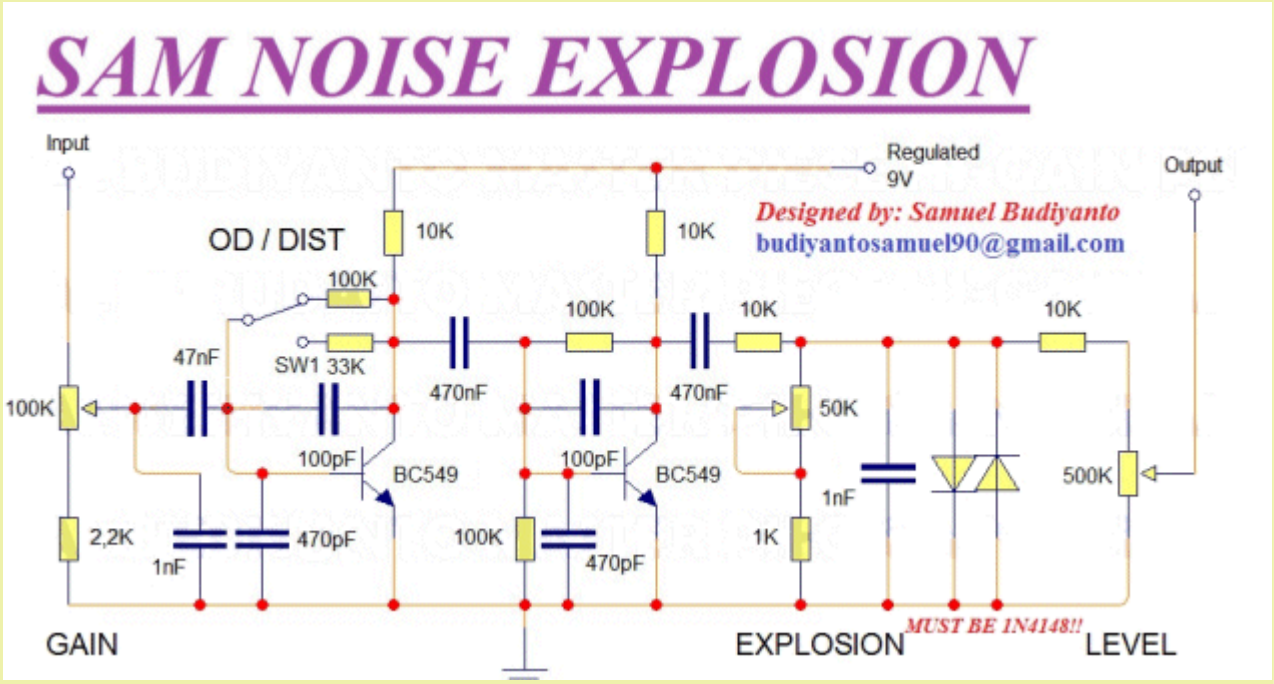

This produces a ROCK PEDAL with very good performance.

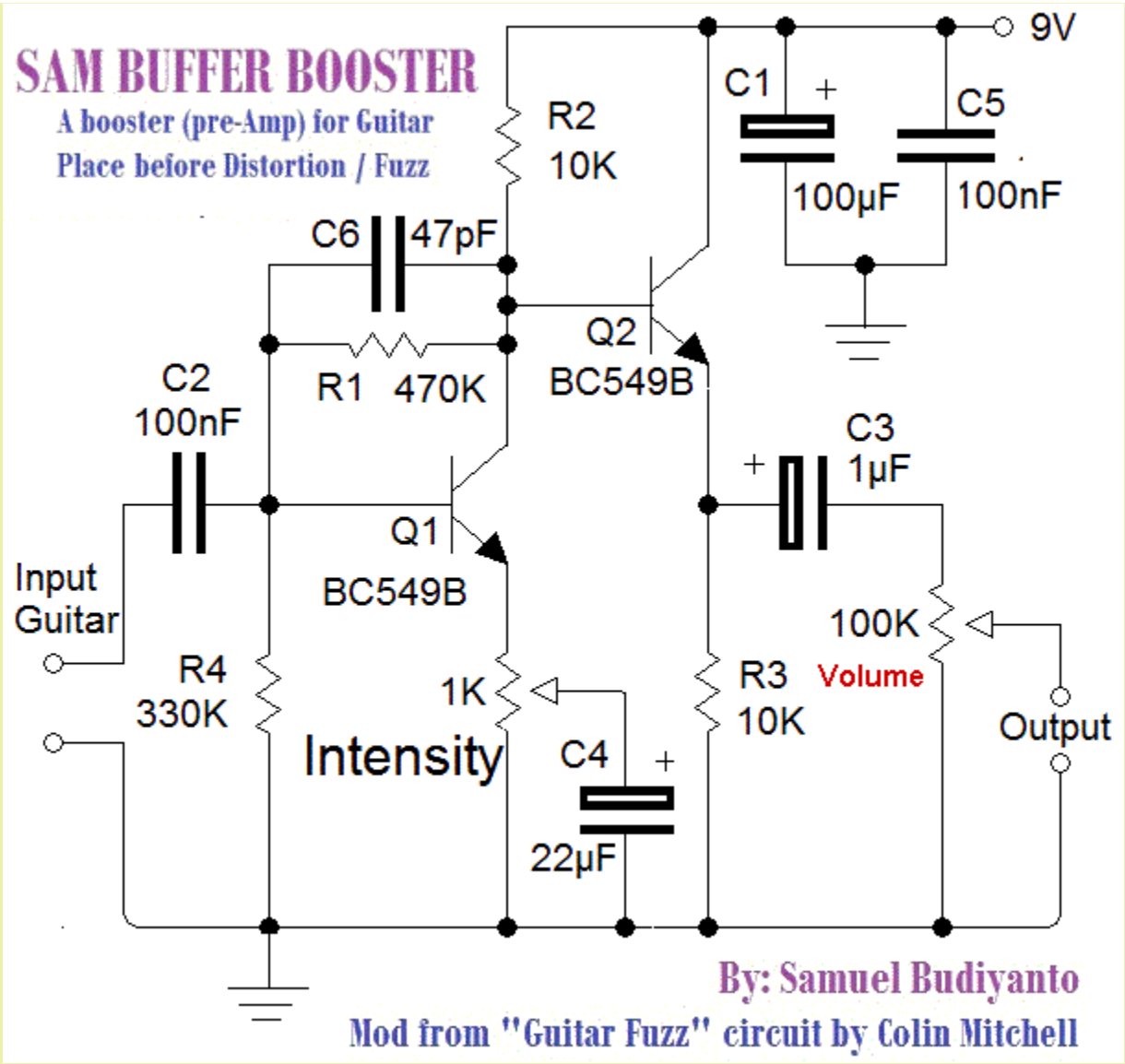

This circuit takes the small signal from the magnetic pick-up and amplifies it 10 to100 times and removes some of the noise via the 47p capacitor.
Insert this circuit before Overdrive / Distortion / Metal / Chorus / Delay and the result is like a very expensive high quality guitar.

The following website has SOUND CLIPS for lots of different effects:
http://www.home-wrecker.com/salvo.html#bazzfuss

Integration and Differentiation

We are going to show how two components, (a resistor and capacitor - in series) produces different results according to the frequency of a voltage (signal, waveform) delivered to them. We also have different names for the two "series components," depending on the actual circuit using the components. We have already covered the TIME DELAY circuit and shown it consists of a resistor and capacitor in series. The join of the two components is detected by a transistor or Integrated Circuit and when a particular value of voltage is reached, the circuit produces results as shown below. When the circuit is first turned ON, the voltage gradually RISES when the capacitor is below the resistor or gradually FALLS when the capacitor is above the resistor.

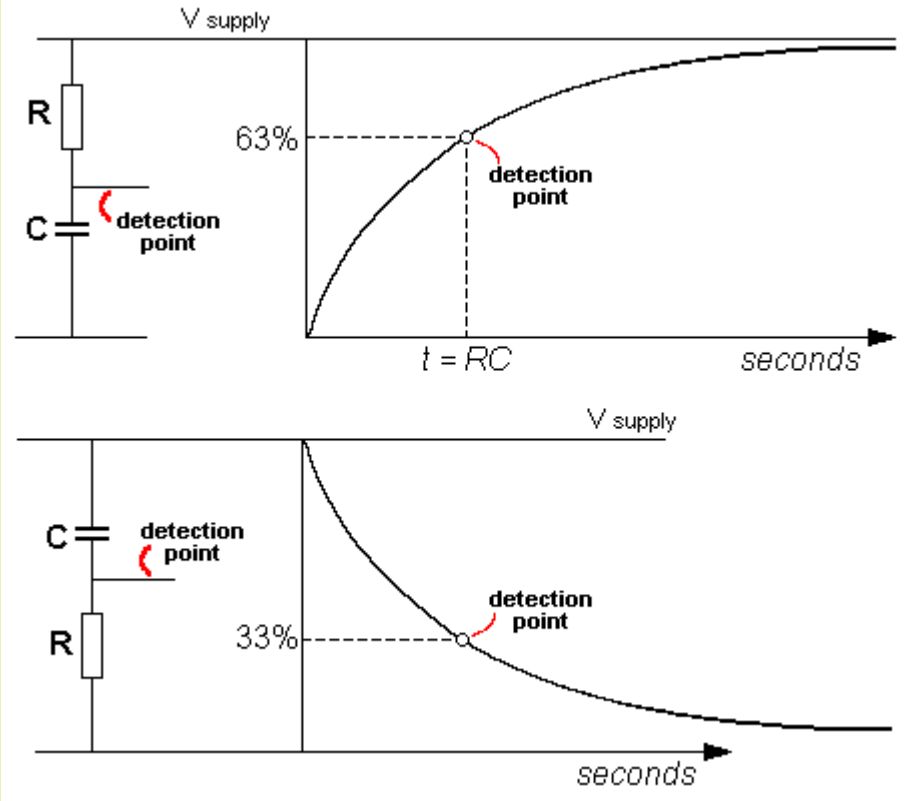

But if we connect the same two components to a rising and falling voltage, a completely different result is produced.
If the input is a sine-wave, the following results are produced when a low-frequency, medium-frequency or high-frequency is supplied to the input:

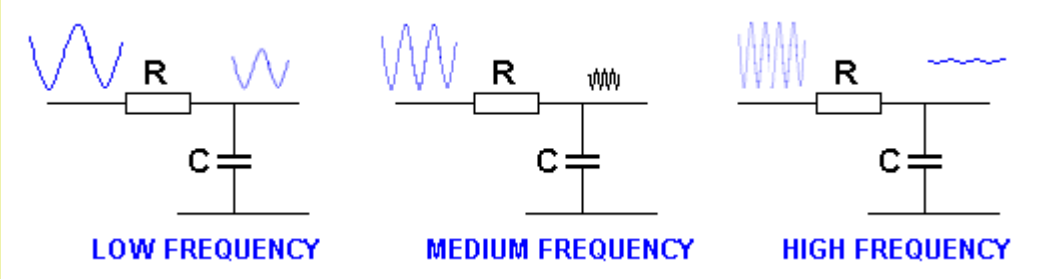

The circuit is a LOW PASS FILTER

You can see the output waveform almost disappears when a high-frequency is delivered to the input. (It disappears in amplitude, but a voltage appears across the capacitor that is approximately the average of the high and low values.)
This means the circuit is capable of removing high-frequency portions of a waveform. If the waveform consists of a mixture of low-frequencies and high-frequencies, only the low-frequencies will appear on the output.
In other words the circuit is a FILTER and it only passes the LOW FREQUENCIES.
In other words it is a **LOW PASS FILTER**.

We now look at the circuit above when ANY frequency is delivered to the input. This time we will eliminate the effect of the waveform when it is falling, by adding a diode to the input.
You will notice a voltage builds-up on the capacitor. This is because the input voltage is charging the capacitor a little-bit more on each cycle. The circuit becomes an INTEGRATOR. It does not matter if the waveform is a sinewave or square-wave - the capacitor gradually becomes charged.

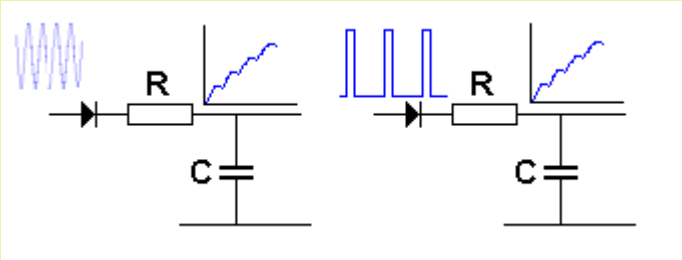

The circuit is an INTEGRATOR
- it gradually charges the capacitor

If we deliver the waveform to the circuit with the capacitor above the resistor, the output is not integrated:

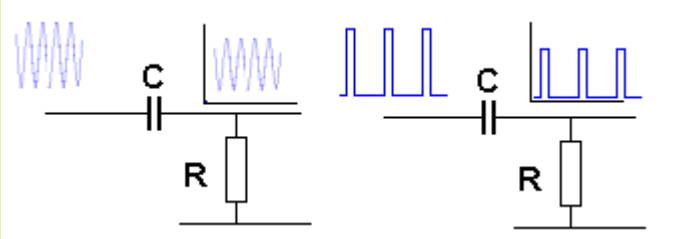

The circuit is NOT an INTEGRATOR

So, what is the purpose of the circuit with the capacitor above the resistor?
The following results are produced when a low-frequency, medium-frequency or high-frequency is supplied to the input:

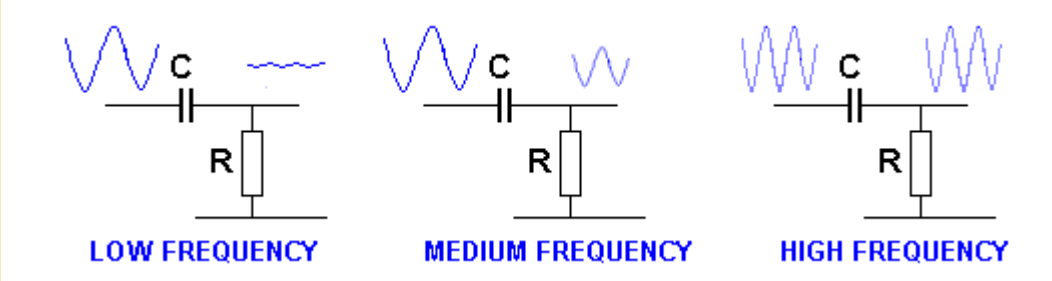

We see the low-frequency waveform is attenuated (reduced) while the high-frequency waveform passes through the circuit.
This produces the name "HIGH PASS FILTER."
It is also given the name "DIFFERENTIATOR."
This means only the high-frequency portions of the input waveform will be delivered to the output.
If we have a waveform consisting of low-frequency and high-frequency components, only the high frequency parts will be delivered to the output.

PULL-UP and PULL-DOWN Resistors

The simplest type of "pull-up" and "pull-down" resistors are shown in the following diagrams:

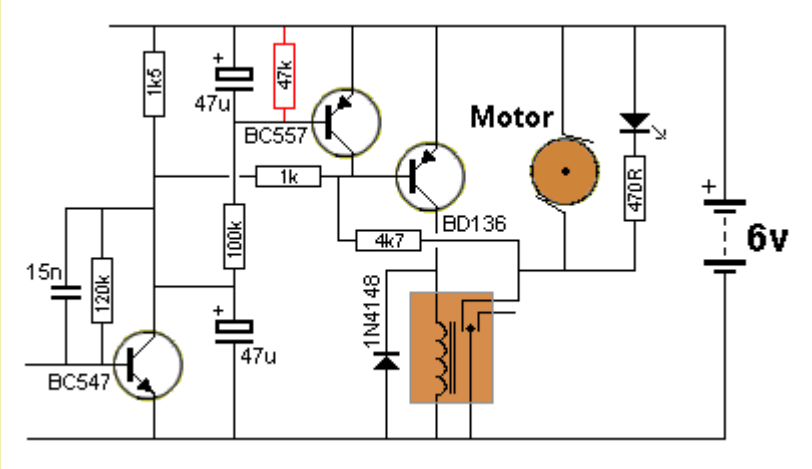

The 47k is a "Pull-Up" resistor. The designer of the circuit wants the base of the transistor to be at a known voltage when the circuit is sitting around, waiting for a signal. The 47k forms a voltage-divider with the 100k and BC547 and it makes sure the BC557 is turned off when the circuit is waiting for a signal. It is pulling the base "UP" so the BC557 is not turned on.

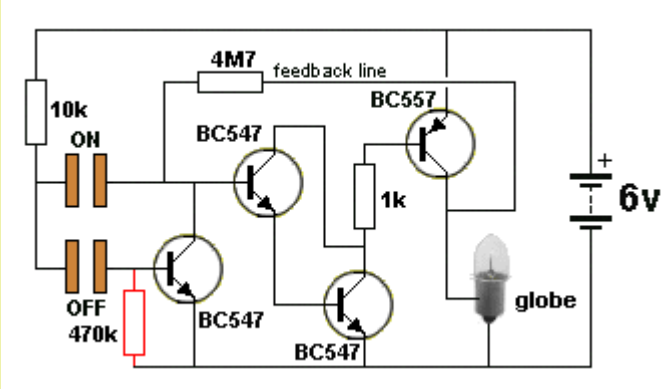

The 470k is a "Pull-Down" resistor. It prevents the BC547 generating a static voltage on the base and turning the circuit OFF.

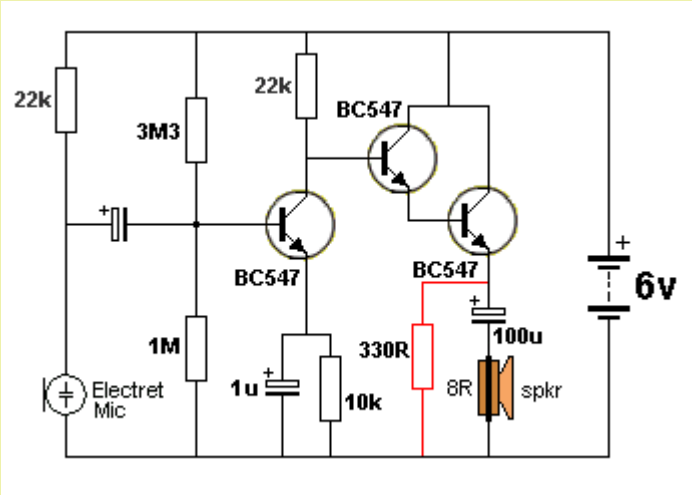

The 330R can be classified as a "pull-down" resistor. It is also part of the load for the output stage.

CLASS-A CLASS-B CLASS-C

Each stage in a circuit can be given a name according to its efficiency. Normally the output stage is the only stage that is classified as "A" "B" or "C" because this is where most of the efficiency or losses occur. However the same criteria applies to the other stages in a circuit and this can give you some indication of the performance of each stage.
The most inefficient stage is classified as **CLASS-A**. It has an efficiency of 25% to 50%.
However it is the best stage for amplifying audio signals as it produces perfect reproduction and amplification. High Fidelity amplifiers are class-A throughout. The stage is biased so the collector is at half-rail voltage. This allows the stage to amplify both the positive and negative portions of the signal.

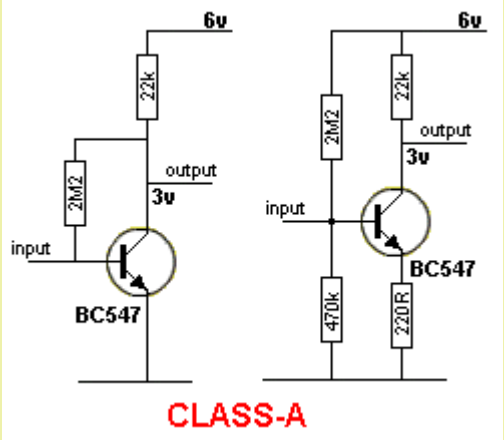

CLASS-B is basically an **EMITTER-FOLLOWER** stage. It is also called **PUSH-PULL** when two emitter-follower transistors are connected together. Push-pull has an efficiency of 78% max. The stage only amplifies the positive portions of the signal. When two transistors are connected, one amplifies the positive portion of the signal and the other amplifies the negative portion of the signal.

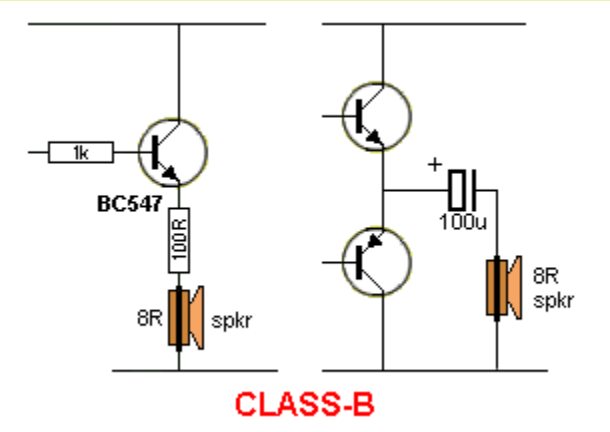

CLASS-C does not have base-bias. It consumes no current when "sitting around" and efficiencies up to 90% are possible.
The energy to turn the transistor ON (and drive the base) must from the input signal. The stage only amplifies the positive portions of the signal and has high distortion, but it can be used in certain applications with very good results.

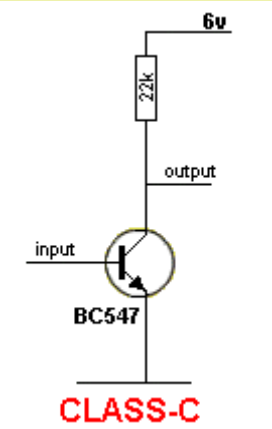

THE DRIVER STAGE

Any transistor that drives a **LOAD** is said to be a **DRIVER** in a **DRIVER STAGE or OUTPUT STAGE**. A **LOAD** is generally a relay, motor, globe, LED or other device that requires a **CURRENT**.

The following diagrams show a DRIVER (or OUTPUT) TRANSISTOR driving a LOAD:

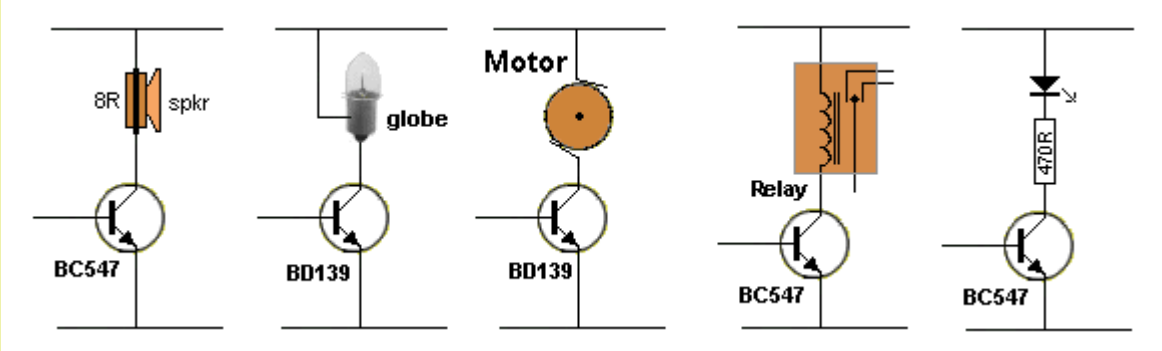

The transistor driving a LOAD

In most circuits, achieving a **CURRENT** to drive a load is the most difficult thing to do.
The **voltage** for the LOAD is easy to get. It is the voltage of the supply. The supply (RAIL VOLTAGE) can be set to match the requirement of the LOAD. If you have a 6v motor, use a 6v supply. If you have a 12v relay, use a 12v supply.
Achieving (getting, supplying) the **current** for the LOAD is the requirement of the transistor - the DRIVER transistor or commonly called the OUTPUT transistor.
The first thing you have to know is the amount of current for the LOAD. This is generally expressed in milliamp (mA) or Amp (A). 1,000mA = 1Amp.
In some cases this is easy. It is on the specification-sheet - such as a LED requires 25mA and a relay requires 90mA. But if a relay states "12volt 100R", you will have to work out its current. It's a simple Ohm's Law equation:

$$I_{(amps)} = \frac{V_{(volts)}}{R_{(ohms)}}$$

To save mathematics, we have provided the current requirement for a number of relays:
5v relay 100 ohms 50mA
5v relay 240 ohms 20mA
9v relay 100 ohms 90mA
9v relay 240 ohms 40mA
12v relay 100 ohms 120mA
12v relay 240 ohms 50mA

The current for some loads is unknown. For example, a 6v or 12v motor will take more current when starting or when heavily loaded. The starting current can be 6 times the running current and this is what the driver transistor must be able to provide. In fact the running current is not known until you try the motor. It can be 50mA, 100mA, 250mA or even 1amp. The starting current can be 6 times the running current.
This is what you have to do:
Connect the motor to the supply (without a transistor driver) and add an ammeter in series with one lead. Turn the motor ON and hold the shaft. Quickly read the current. Release the shaft and read the running current.
Suppose a motor requires 600mA to start and 100mA to run. In other words, the motor will take 100mA when lightly loaded and 600mA when heavily loaded.
The driver transistor will be required to supply 600mA to start the motor (and when it is under load) and when it is running under almost no-load, the current will drop to 100mA.

For a transistor to supply 100mA to 600mA to the motor, we must deliver current to the base. The transistor simply amplifies the current we supply to the base. The amplification factor is called the CURRENT AMPLIFICATION or CURRENT GAIN and is normally 100, but this only applies when the transistor is lightly loaded.

CURRENT GAIN
If a transistor has a CURRENT AMPLIFICATION of 100, 1mA into the base will allow 100mA to flow in the collector-emitter leads (collector-emitter circuit).
But if a transistor is designed to handle 100mA, it will only deliver about 50mA when 1mA enters the base. It may take 2mA base-current to get to 70mA, 5mA to get to 80mA and 10mA to get to 100mA.
To deliver 100mA, you will need a transistor capable of delivering about 300mA. That's because the larger transistor has a larger junction and is capable of handing the current.

For example, you will need a 300mA transistor to handle 100mA and a 1 or 2 amp transistor to handle 600mA. This is a fact that is rarely explained.
When you choose the right transistor, it will remain fully saturated when 100mA is flowing and the voltage across the collector-emitter will be less than 0.5v. In other words, the transistor will remain FULLY SATURATED or FULLY CONDUCTING.
When the current exceeds the maximum rating, the transistor falls out of conduction. In other words the voltage across the collector-emitter terminals will increase above 0.5v and will gradually rise to 1v, 2v, 3v, or more as the current increases. When this happens, the wattage dissipated by the transistor increases and it gets very hot. The transistor may be able to deliver the higher current but the voltage across the load will be reduced as some of the voltage is lost across the transistor.

Let's take this in more detail:
When a transistor is fully saturated and passing 600mA, the collector-emitter voltage will be as low as 0.2v to 0.5v. The wattage dissipation will be: P=VI = 0.2 x.6 = 0.12watts or P=VI = 0.5 x.6 = 0.3watts
If the transistor comes out of conduction and produces 3v across the collector-emitter terminals, the wattage dissipation increases to: P=VI = 3 x.6 = 1.8watts This is an enormous increase in heat produced by the transistor. That's why you don't want a transistor to come out of conduction.

How do you know if a transistor has a gain of 10 or 100?
You don't. There is no way to know if a transistor has a gain of 10 or 100.
However if you follow our suggestions, you will be able to achieve the maximum gain:
Select a transistor capable of delivering 2, 3 or 5 times more current than is needed for the project you are designing. This will allow it to operate in its HIGH GAIN region because it will not be over-loaded.
Feel the temperature-rise of the transistor and use a heatsink to prevent it over-heating.

A transistor capable of supplying 1amp will be operating near its maximum when supplying 600mA and the base will need 60mA.
In the diagram below, the transistor is not controlling the current. It simply supplies the current demanded by the motor. If the motor requires 100mA, the required current will flow though the collector-emitter leads of the transistor. When the motor "asks for" 600mA, the transistor will deliver the current.
For this current to be available to the motor, the transistor must be turned ON and fully saturated.
The 60mA base current flows ALL THE TIME so that when 600mA is required by the motor, the transistor will deliver the current.
The following diagram shows the current required by the motor. Here's the important point. The circuit must be designed so that it can deliver 600mA **AT ANY TIME**. This means the transistor must receive a base current of 60mA **AT ALL TIMES**.
If you use a high-power transistor, it may have a gain of 50 or more when delivering 600mA and the base current will be lower, but we will take the case of the transistor having a gain of 10 when 600mA flows.

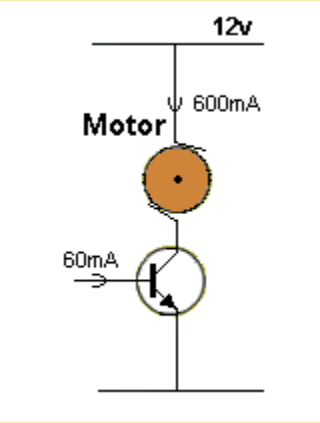

Base Current

Base-current:
Base current comes from the previous stage in a circuit.
There are two ways to deliver this current:
1. via a load resistor
2. via a transistor.
We have already seen the inefficiency of delivering a current via a load resistor, as shown in the following circuit:

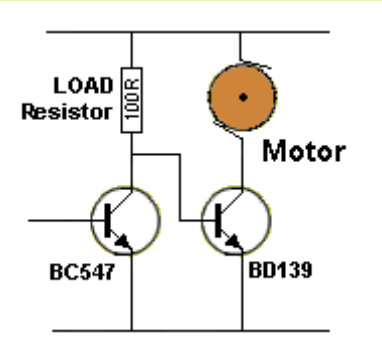

Base current supplied via a LOAD resistor

In the circuit above, current is always flowing through the 100R LOAD Resistor. The BC547 is merely diverting the current from the base of the output transistor to the 0v rail. We will not be describing this circuit arrangement.

It is much more efficient to deliver a current via the following type of circuit:

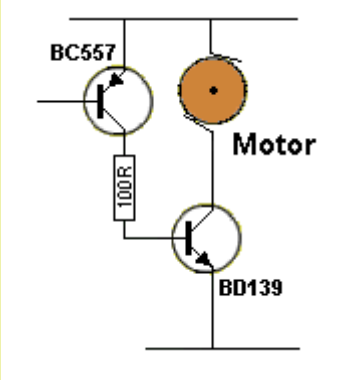

In the circuit above, current is only flowing through the 100R LOAD resistor when the PNP transistor is turned ON. The 100R CURRENT LIMITING resistor determines the base current for the output transistor.

We have now designed the best circuit for driving a LOAD:

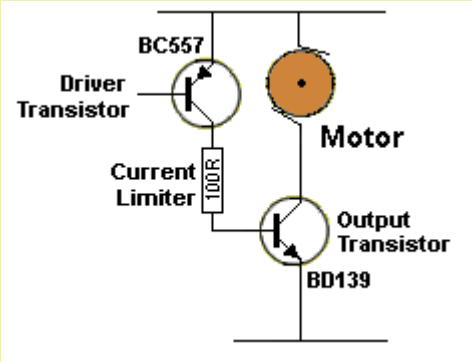

The approximate current in each leg of the circuit for 1Amp LOAD is as follows:

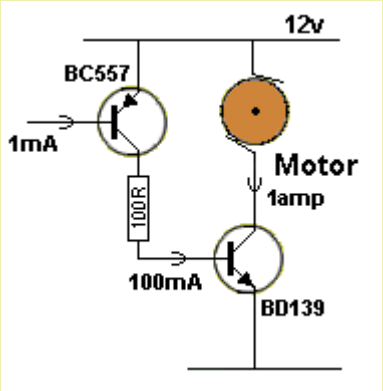

This means 1mA will control (deliver) 1amp (1,000mA) into a LOAD.

Here is the PNP-output circuit:

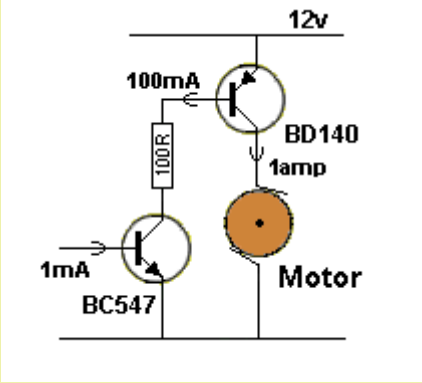

In Summary: When designing a circuit, we allow a current-gain of 100 when a transistor is lightly loaded and a gain of 10 when fully loaded. The driver transistor will have a gain of between 100 and may drop to 10 when full current flows. This means it will need 1mA base current for 100mA it delivers to the load when the gain is 100, but will need 10mA for 100mA, when it has a gain of 10.

This also applies to a globe (lamp) as the load. A globe requires 6 times more current to begin illumination because the filament is cold and its resistance is less than when it is hot.
To make sure the circuit will illuminate the lamp, the driver transistor must be able to deliver up to 6 times the operating current for a very short period of time.

A transistor driving a speaker requires the same driver and output arrangement as driving a motor as it is a very low (impedance) resistance.

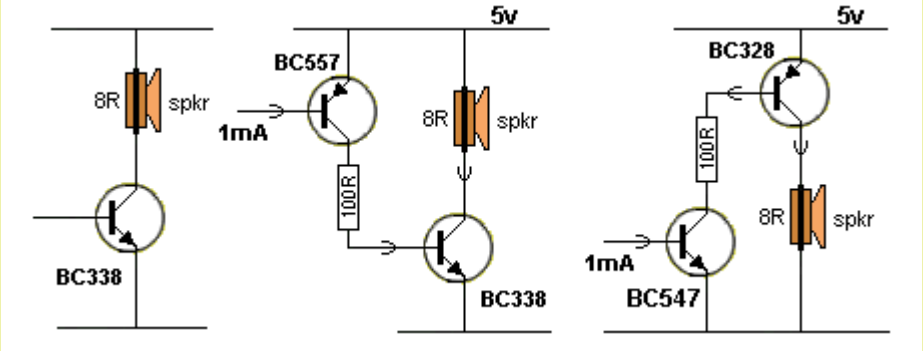

The situation is different with a LED. The current required for a LED is small and a small-signal transistor can supply the current and have a gain of 100. The current for a LED will be about 25mA and the base current will be less than 0.25mA

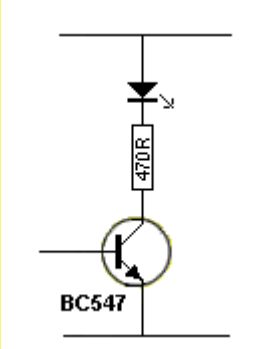

The current for a relay can also be provided by a small-signal transistor and the gain can be 100.

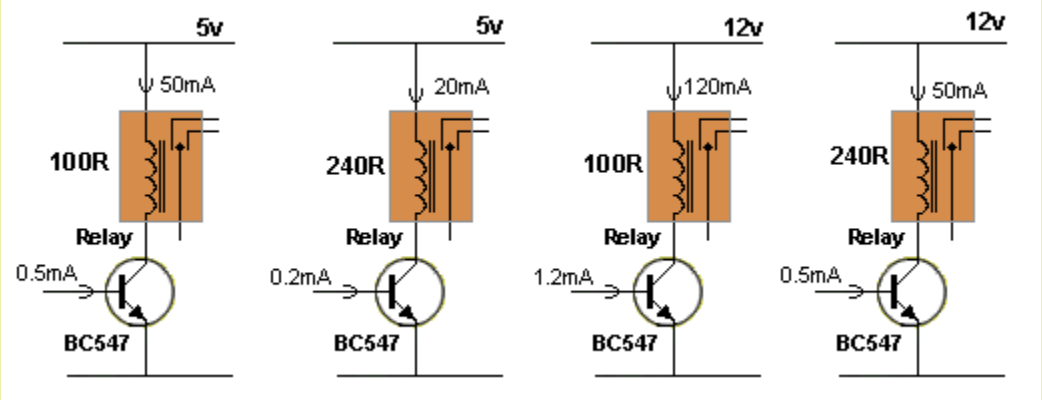

The base current must come from a previous stage

For low-current requirements, use a BC547 for the driver/output transistor. A BC547 will handle up to 100mA.
Similar transistors include: 2N2222A, BC107, BC108, BC109, BC142,BC182L, BC337, and many others.

How to Design a DRIVER STAGE

For a HIGH CURRENT requirement, the NPN driver transistor needs to handle 1 amp or more.
For 1 amp use: BC142, BC337, BD131, BD139,
For more than 1 amp use: 2N3054, BD131, TIP31A and many others.

Use a heatsink.
To make sure the transistor stays IN CONDUCTION, measure the collector-emitter voltage when under FULL LOAD. The collector-emitter voltage must not be above 1v.

An 8R speaker puts a very heavy demand on any supply rail and this can cause glitches that may affect the operation of other sections of the circuit.

Fig A shows a speaker connected to a driver transistor. The circuit will work but the first 0.5v of the signal will not be reproduced as the transistor does not turn on until the base sees 0.6v. The circuit takes no current in quiescent mode as the transistor is not tuned on. The output will be distorted.
Fig B shows a base bias resistor connected to the positive rail. This resistor will have to be a low value (about 2k2 to 10k) to turn the transistor ON so that the collector will be at about half rail voltage. This will allow both the positive and negative excursions of the signal to be reproduced.
Fig C shows the transistor in self-bias mode. Figs B and C are very similar. The resistance of the base bias resistor will be slightly lower in fig C and selecting the right value will provide about half rail voltage on the collector.

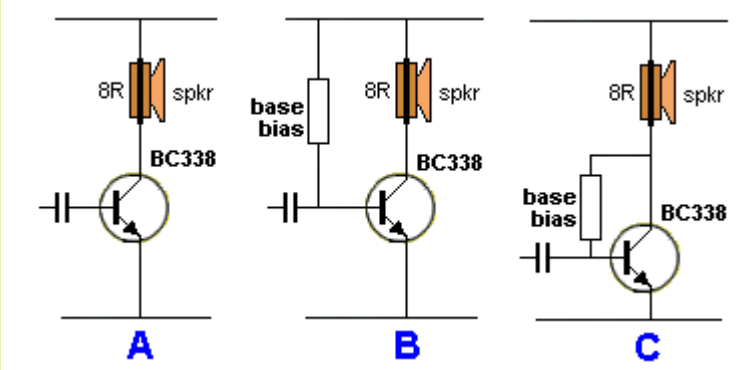

But the problem with all these circuits above is the high current taken by the stage.
As you can see, the load is only 8R and if the transistor is partly turned ON, the idle current will be very high.
This can can be reduced by using the following circuits. The output volume will be reduced, but the current will be reduced considerably.
In the circuits above, the output impedance is 8R. In the circuits below, the output impedance has been increased to 30R and 158R.

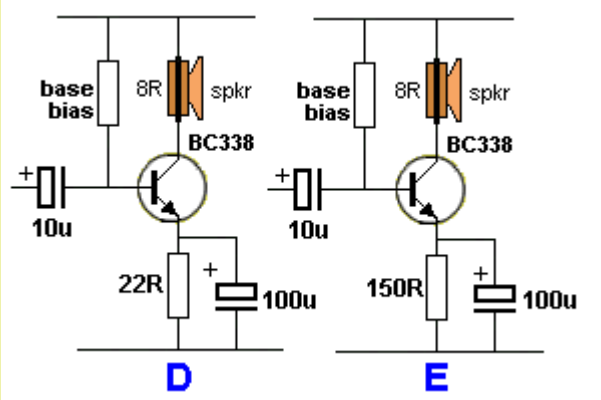

The secret to the good performance of stages D and E is due to the 100u on the emitter. This electrolytic turns the stage into a common-emitter amplifier, just like circuits A, B and C, as far as the audio signal is concerned, but turns the LOAD into 30R or 158R as far as the DC current is concerned.
We get the best of both conditions at the same time.

DESIGNING AN OUTPUT STAGE

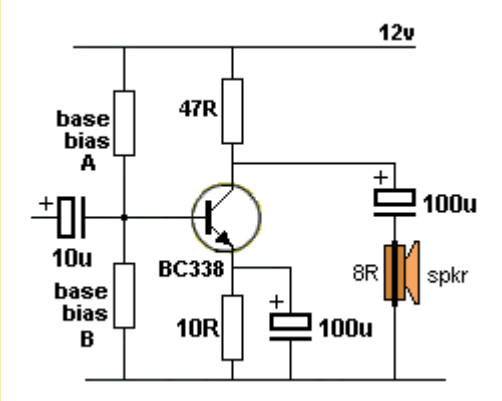

The circuit at the left shows an output stage as described in the video above, by the "Professor."
He tried to explain the base-biasing but failed.
In fact he did not know what he was talking about.
That's because the operation of the circuit is much more complex than you think.
The circuit has two features. The H-bridge design allows a known operating-point to be produced, even though the gain of the transistor may change from one device to another.
Suppose the transistor is replaced with another having a higher gain.
The collector current will increase and more current will flow though the emitter resistor. This will produce a higher voltage across the emitter resistor and the difference between the base voltage and the emitter will be reduced.

This will turn the transistor OFF slightly and maintain the original conditions.
The second feature of the circuit is the electrolytic in series with the speaker. This allows **only** the AC portion of the waveform to enter the speaker and the cone is not "pulled" due to DC flowing though the voice coil.
However, the operation of the circuit is very complex, so we will explain it this way:
The design of the circuit starts by selecting the value of base bias resistors A and B. The resistors are chosen so that a voltage of about 0.7v is produced on the emitter. This allows the stage to be turned ON with about the lowest quiescent current. (This will produce a voltage of about 0.7 x 47 = 3.3v across the load resistor.)
To get 0.7v on the emitter, we need 1.4v on the base. This gives us the ratio of base bias resistor A and

base bias resistor B.
The next thing we consider is the maximum current we want to flow through the load resistor. When the transistor is fully turned ON, this current can be as high as 230mA.
Let us allow the base current from the divider to be 100mA. The additional current will be created when the signal arrives and turns the transistor ON more.
Suppose the transistor has a gain of 100. This means the base current must be 1mA.
This will cause 100mA to flow through the 10R emitter resistor and produce a voltage of 1v.
The base voltage will be 1.7v.
The voltage across base bias resistor A will be 10.3v
The next design-feature to remember is this:
The current flowing through the base voltage-divider (resistors A and B) should be 10 times the base current to provide stable operation.
This means the current through base bias resistor A is 10mA.
The value of base bias A is: 10.3/0.01 = 10.3k
The value of base bias B is: 1.7/0.009 = 1.8k
Forget about the actual amplitude of the incoming signal.
What happens with the incoming signal is this:
The signal-peak gets converted by the 10u electrolytic to produce either a 2mA flow into the base or it cancels the 1mA flow to produce 0mA into the base.
The 100u electrolytic on the emitter prevents the emitter rising or falling and the stage operates just like the emitter is connected directly to the 0v rail.
When the incoming signal cancels the 1mA into the base, the transistor is turned off and the 47R charges the 100u connected to the speaker. This current flows through the speaker to shift the cone. A voltage develops across the electrolytic and energy is stored in it.
When the signal rises, up to 2mA flows into the base and the transistor is fully turned ON.
The energy in the electrolytic flows through the speaker and moves the cone in the opposite direction.

CONCLUSION:

The stage takes considerable current when "sitting around" and this is one of the disadvantages of a "Class-A" stage. If you want low quiescent current - use a class-B output stage.
The stage has a low input impedance (about 1k8) however it is driving an 8R load (the speaker) and this is a ratio of more than 100:1 and the stage is achieving a considerable "conversion."
You can call this circuit an INTERFACE, BUFFER, AMPLIFIER, DRIVER, POWER-AMPLIFIER, or MATCHER. It does all of these things.
The circuit must consume about "half-current" when "sitting around" so the incoming signal can increase the current to full-current or reduce it to almost zero, so the output signal is not distorted.
The "design-feature" involving the two resistors on the base can be changed to only allowing 2 or 3mA as "bleed current" so the input impedance is higher.
This will make the 1k8 resistor as high as 1.8 x 3 = 5.4k and the incoming signal will not be attenuated as much. The attenuation applies to both the rise and fall of the signal as this 1k8 (5k4) is directly across the signal.
It's all a matter of building the circuit and see how it performs as the transistor is at its limit of heat dissipation in this amplifier.
A simpler circuit is shown here. The base-bias resistor is chosen so that half-voltage appears on the collector and the transistor is self-biased so transistors with a slightly different gain will operate correctly.
This operation is commonly called "Mid-point operation" or "Q-point" operation. For maximum output the load resistor will need to be 8R, but this will create a current-flow that is more than the transistor will handle.
That's why we use "class-B" (Push-Pull) output stages.

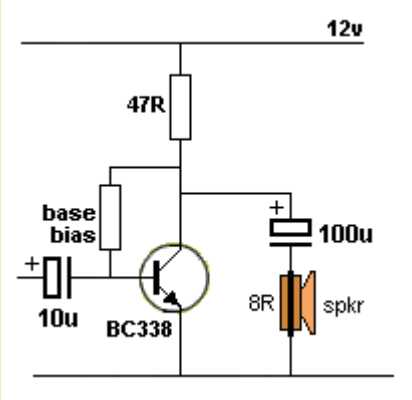

If you want to see the complex mathematics behind the circuit above, click HERE for a .pdf from a

subscriber and teacher, Tom Wheeler thomas.wheeler@mcckc.edu. He has provided a mathematical assessment to show the power delivered to the speaker can be as low as 8% and in most cases it is not much higher than this value.
This is one more proof that "class-A" configurations are very inefficient.

Mr Wheeler is a lecturer at a tertiary college in Kansas City Missouri USA.
If you are interested in taking a course in electronics, you should investigate the courses available in a college near to you.
It is not easy to get through the jumble of course-names and terminology provided by colleges, technical colleges, institutes, Universities etc, but start by looking on the web and refer the to course-structure to see what topics are covered.
Mr Wheeler's college is **Metropolitan Community College in Kansas City, MO** www.mcckc.edu

Here is a brief listing from the colleges introduction:
The Metropolitan Community College Business & Technology Campus (BTC) is one of five MCC campuses that serve the greater Kansas City area. BTC offers both degree and certificate programs in Computer Aided Design and Drafting (CADD), Cisco Networking (CCNA/CCNP), Engineering Technologies (Mechanical/Electronic/Architectural/Civil), Environmental Health & Safety (EHSS), Electric Utility Lineman, Heating Ventilation and Air Conditioning (HVAC), Industrial Technologies (Instrumentation & Controls/Industrial Maintenance/Energy Efficiency), Solar/Photovoltaic Energy, Precision Machining, Welding, as well as degree completion programs designed for US military veterans and skilled trade apprenticeship completers. We are located at 1775 Universal, Kansas City MO, 64120; please visit our web site at www.mcckc.edu/btc, or call 816-604-5200 to arrange a campus tour.

THE TRANSISTOR AS A BUFFER

We have already described the transistor as a **BUFFER** but previously we used different wording, such as **DRIVER**, **EMITTER-FOLLOWER** or **SINKING TRANSISTOR** or **SOURCING TRANSISTOR**.
In all these descriptions the transistor is doing the same thing. It is receiving a small current and/or a small voltage and delivering a larger current and/or a larger voltage.
All the terms are interchangeable and **BUFFER** describes a transistor that is placed between a **LOAD** that requires a high current and a **BUILDING BLOCK** that is only capable of delivering a small current.
A BUFFER or DRIVER TRANSISTOR is BUFFERING or JOINING the low impedance of the LOAD to the high impedance of a previous stage.
If you remove the buffer transistor and join the previous stage to the load, the result will be either very little volume from a speaker, or a solenoid that does not operate or a globe that does not illuminate.
These devices do not work because the CURRENT is insufficient.
Many devices ONLY work when sufficient CURRENT flows.
That's what the DRIVER TRANSISTOR does. It increases the CURRENT.
Sometimes a transistor will increase the voltage from one section of a circuit to another.
This is called AMPLIFICATION and we do not use the word buffer. BUFFER only refers to amplifying CURRENT.

BIASING A TRANSISTOR

We have seen many different ways to bias a transistor and now we look at 3 and compare them.

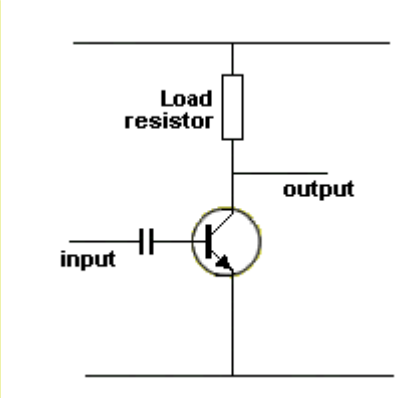

Transistor NOT biased

This transistor is not biased AT ALL. However it will work if the incoming signal is large.
The signal needs to provide all the energy to turn on the transistor and it only amplifies the positive portions of the waveform.
The amplifier is classified as "Class-C."

To help discharge the coupling capacitor during the negative portions of the waveform, a diode can be included as shown. It comes into

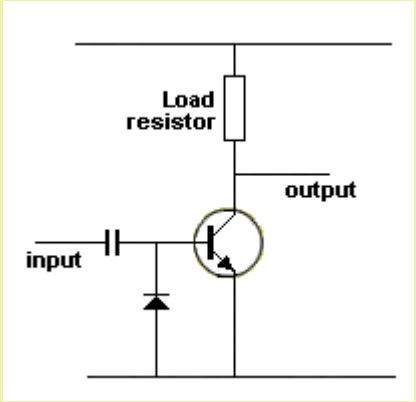

Diode discharges capacitor

operation during the negative part of the cycle by "flipping over" and conducting when the negative part of the signal is less than -0.6v. All the waveform lower than -0.6v is passed through the diode and the capacitor is discharged during this portion of the signal.
A "Class-C" amplifier takes zero current when "sitting around" (quiescent current), and can be classified a very efficient, however in most cases it will produce distortion.

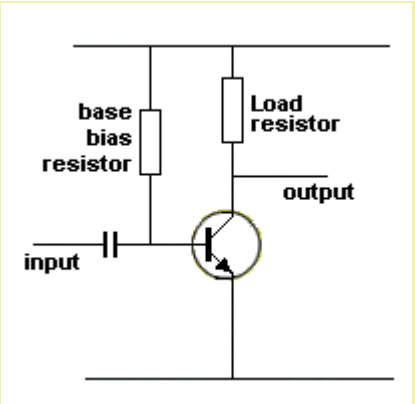

This circuit uses a base bias resistor between base and supply.
It is a "Class-A" amplifier.
This circuit will work successfully if the base bias resistor is chosen so the collector voltage is mid-rail.
However if you use another transistor with a lower or higher gain, the collector voltage will be higher or lower than for the previous transistor.
In addition, the gain of the transistor will change slightly due to temperature and the collector voltage will alter.
This is not a good design as the collector voltage is not stable.

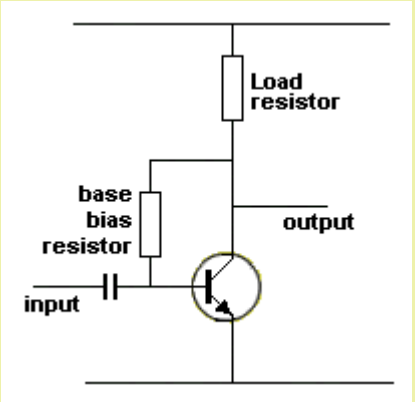

To make the operating-point of "Class-A" amplifier stable, the base-bias resistor is connected as shown.
If the gain of the transistor reduces due to temperature rise, the collector voltage will increase. This will increase the current through the base bias resistor and turn the transistor ON more and lower the collector voltage. It will not reduce to exactly the same voltage as before but the circuit will adjust to a fair extent.
If the transistor is replaced by one with a higher gain, the collector voltage will reduce. This is allow less current to flow into the base and turn the transistor off slightly and the collector voltage will rise. It will not rise to exactly the same voltage as before but the circuit will adjust to a fairly good extent.
This is called a "self-biasing class-A amplifier."

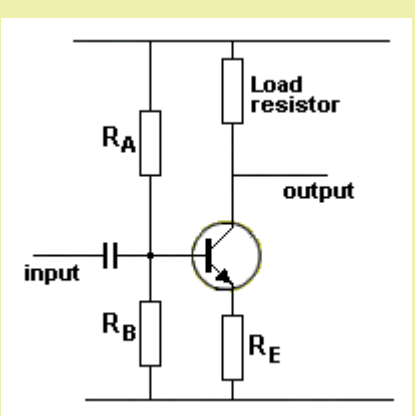

To get a better automatic biasing features as the circuit above, two additional resistors are needed and the circuit forms a bridge. (The word "bridge" comes from "Wheatstone Bridge" where 4 resistors are placed in a square to form a balancing network).
Ra and Rb form a voltage-divider to produce a fixed voltage on the base.
Re is a feedback resistor to create the stabilizing feature.
See: Emitter Feedback
Suppose the transistor gets warm on a hot day and looses gain.
The collector voltage will rise and the current through the load resistor will decrease. The current through Re will also decrease and the voltage across it will decrease. This means the voltage between the base and emitter will increase and the transistor will turn ON more to counteract the voltage-rise on the collector.

The value of Ra and Rb are calculated so that 10 times the base current "bleeds" through them. In other words, 10mA bleeds through Ra and 9mA through Rb so that 1mA goes to the base.
This is very wasteful, but let's look at why the bleed current needs to be 10x the base current.
There are two "design factors" in this type of circuit.
1. The bleed current through the voltage divider Ra/Rb is 10 times the current required by the base.
2. The values are chosen so that about 1v appears on the base. This allows the transistor to be turned ON and gives about 0.3v across the emitter resistor. This allows the emitter resistor to stabilize the stage and allows the transistor to turn ON and pull the output as low as possible when a large amplitude signal is delivered.

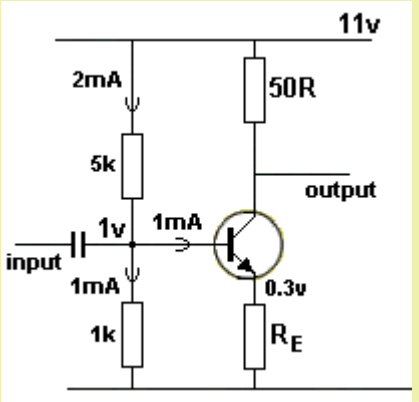

Let's see why the bleed current is 10 times that required by the base. We will start with a bleed current of 2mA through Ra and 1mA through Rb with 1mA going to the base.
Suppose the transistor has a gain of 100. The current through the collector-emitter circuit will be 100mA and the value of Re will be 3R. The voltage across the load resistor will be 5v and the voltage on the collector will be 6v.
Suppose the transistor is replaced with one having a gain of 200. We already now the value of the load resistor (50R) and emitter resistor (3R) and the base bias resistors have the capability of delivering 1mA. What will happen is this: The transistor will turn ON and because 1mA base current is available, it will allow 200mA to flow through the collector-emitter circuit.

The voltage across the emitter resistor will be 0.2 x 3R = 0.6v and the voltage-drop across the 50R will be 0.2 x 50 = 25v. We do not have 25v available (only 11v) and the transistor will turn ON to a point where it is fully saturated. This situation has occurred because the base voltage was able to rise so the base-emitter voltage is 0.7v. Since the transistor is taking only 0.5mA, the voltage across the 1k will theoretically be able to rise to 0.0015 x 1,000 = 1.5v
Now you can see why we want the base voltage to remain stable, so a transistor with a gain of 200 is not fully turned ON and the same collector voltage is produced for a wide range of gains.

BASE-EMITTER VOLTAGE

Up to now we have talked about the base-emitter voltage of a transistor as being about 0.55v to slightly more than 0.7v - depending on the transistor and how "hard" it is being turned ON.
But there is also a situation where a transistor must be TURNED OFF by providing a very low voltage on the base.
Sometimes you cannot provide 0v on the base due to the "control voltage" coming from another chip or a set of voltage-dropping resistors.
Some transistors (including surface-mount types) have a base-emitter voltage as low as 200mV, depending on the temperature of the transistor. As the temperature increases, the base-emitter voltage decreases and this will be quite a SURPRISE!
The following two circuits are typical examples:

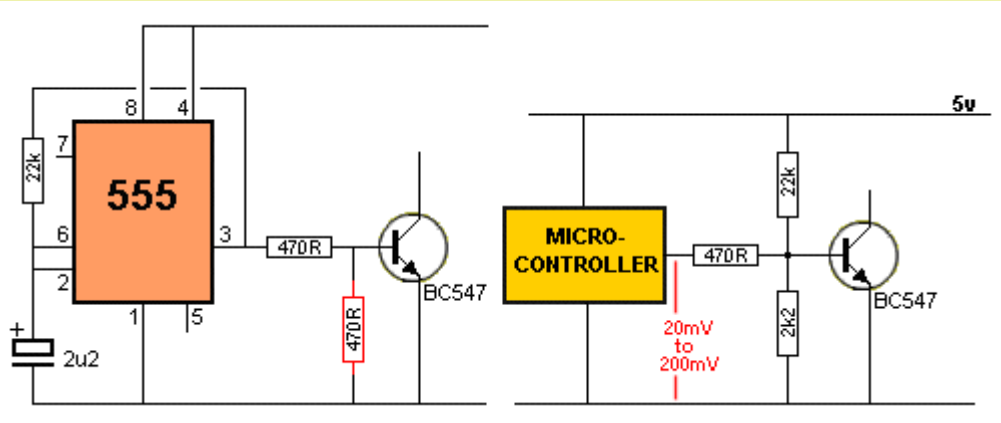

The voltage on Pin 3 of the 555 (when it is LOW) can be as small as 100mV (depending on the SINKING CURRENT - the current flowing "into" pin 3 when a load is placed between pin 3 and the positive rail).
As this current increases to 200mA, the voltage on Pin 3 increases to 2.5v - WHEN IT IS LOW !!
Since this voltage is unknown and widely-variable, it is a good idea to add the extra 470R (shown in RED), to reduce the voltage on the base to a "cut-off" value.
When the chip is driving into the base of a buffer transistor, the current will only be very small when the output is low and to make sure it is below "cut-off" the extra 470R **HALVES** the base-emitter voltage - just tp make sure !!
In the second diagram, the voltage divider made up of the 22k and 2k2 produces a voltage of 0.5v on the base, however the inclusion of the 470R reduces this further and even though the output of the micro may be as high as 200mV when sinking a current such as 25mA, the base voltage will not go above 201mV. (In the circuit above the LOW voltage on the output of the micro will be almost zero - so, in this case, there is no problem).

Transistors with internal Resistors

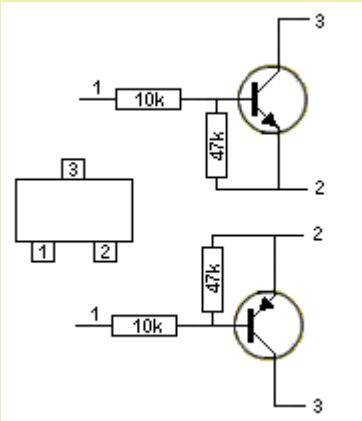

Transistor with Resistors

Some transistors have internal resistors. This includes small-signal transistors, power transistors, Darlington and surface mount devices. You must know if the transistor you are testing has internal resistors because the circuit will be lacking one or two resistors and you will wonder how it has been designed.
In most cases the values of the resistors will be the same as what you would use with a transistor not having internal resistors however if you are designing a new circuit, it is best not to include transistors with internal resistors - you may want to change the value and this is not possible with fixed values.
Some surface mount transistors and Darlington transistors have different values to those shown in the diagram on the left and you need to use a datasheet to determine the exact values. When testing these transistors they will appear to be faulty due to the internal resistors.
The resistor-values are chosen for circuits using the transistors with a medium to high collector current. They are not suited for stages where a very low collector current is required as the base resistor would be 47k to 100k.

Using a Transistor with a Higher Gain

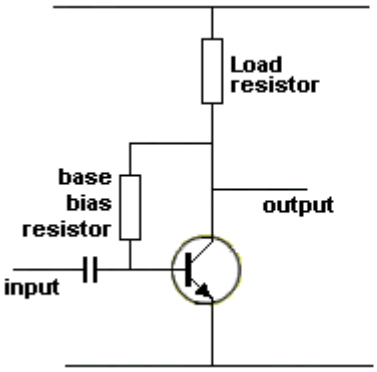

Self Biasing

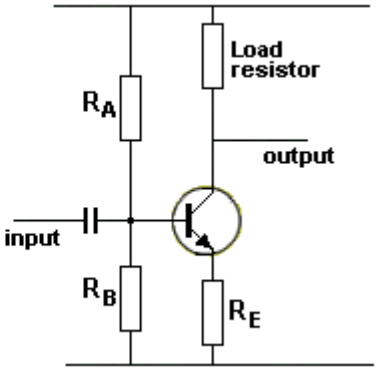

Bridge Biasing

There are 4 main features of a transistor.
1. Its power-handling capability,
2. Its voltage-rating,
3. Its maximum frequency,
4. Its gain.
What happens if you replace a transistor with one having a higher gain?
The operating point (the "Q-point") will adjust in the Self-Biasing circuit but if the new transistor has a much-higher gain, the collector voltage will be lower.
The Bridge-Biasing arrangement will maintain a more-constant collector voltage when the transistor is replaced with one having a higher gain.

In other words, the **quiescent-point** or **operating-point** (or mid-point for the collector-voltage) of a Self-Biasing or Bridge-Biasing circuit will self-adjust when the gain of the transistor alters. But a higher gain transistor will allow the collector voltage to drop closer to 0v when the incoming signal delivers the high portion of the waveform. The result will be a slightly higher output because the output will go to a lower value than before.
The opposite will occur with a transistor having a lower gain.
See self-biased transistor and biasing for details on how to design the two stages.

Using a Transistor as a CURRENT LIMITER

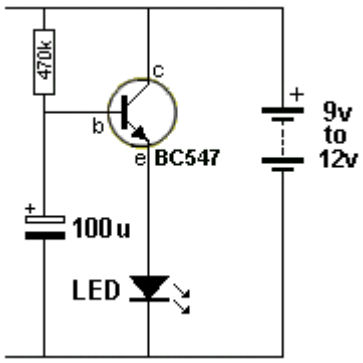

10 Second Delay

The circuit produces a delay of a few seconds due to the **TIME DELAY** circuit (made up of the 470k and 100u) taking time to charge the 100u.
The transistor is an **EMITTER FOLLOWER** and the emitter rises at the same rate as the base but is about 0.7v less than the base.
The circuit does not have a CURRENT LIMITING resistor in series with the LED or in the collector circuit because the transistor can only allow a current between the collector and emitter terminals that is 100 to 200 times more than the current entering the base and it effectively becomes a resistor. If the transistor has a gain of 200, it will be 470,000/200 = 2350 ohms. This will deliver 10/2350 = 4mA.
Another way to explain the circuit is to work out the current entering the base. The voltage across the 470k resistor will be about 10v max for 12v supply and the current will be 0.02mA.

The emitter current will be 0.02 x 200 = 4mA max.
The transistor is acting as a **CURRENT LIMITER**.

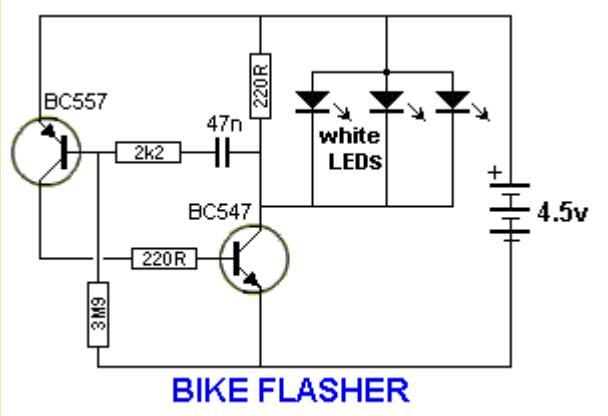

You will notice the absence of a current-limiting resistor on the white LEDs.
There are two reasons why this resistor can be eliminated.
The BC547 transistor can only pass about 100mA and three white LED can easily accept 30mA each. The LEDs need to be tested to make sure they all have the same "Characteristic Voltage" of 3.3v or 3.5v so they illuminate equally.
Secondly, they are only illuminated for a very short period of time and your eye extends the effect by a feature called PERSISTENCE OF VISION. This means they will never get overheated.
Even though the transistor is seeing about 15mA into the base, it will still only allow 100mA collector current to flow and it is acting as a CURRENT LIMITER for the LEDs.

TRANSISTOR REPLACES A RELAY

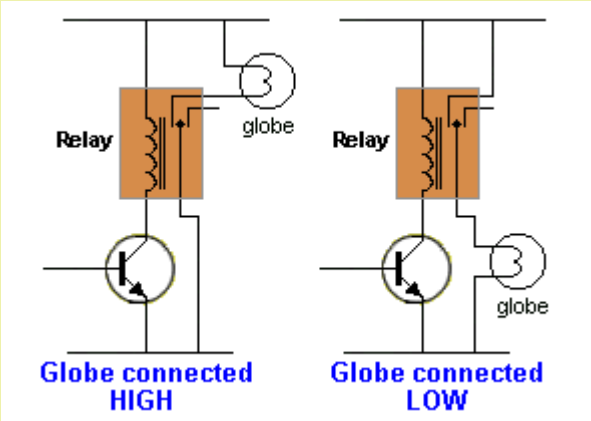

You need all the previous discussions to understand how a transistor can be used to replace a relay.
A replacement can only be used in some cases.
The main advantage of a relay is its ability to completely isolate the driving circuit from the load.
That's the main reason why it is used. A transistor does not provide this isolation.
However a relay has a limited life and if the circuit is constantly switching on and off, the relay will soon fail.
There are a number of factors that need to be considered before a replacement can be made.
The first is the way the load is connected. It can be connected "HIGH-SIDE" or "LOW-SIDE."

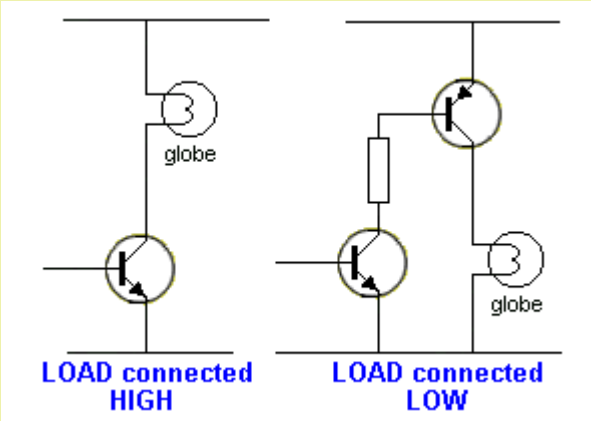

In other words, the load can be connected between the positive and relay to create HIGH-SIDE. (the other terminal of the relay is connected to 0v.)
Or it can be connected between the relay and 0v to create LOW-SIDE. (the other terminal of the relay is connected to positive rail.)
This will determine how the transistor circuit is designed.
The other important factor is the current-capability of the transistor. It must be able to handle the current and it must be driven into saturation so that the least voltage is lost across the collector-emitter circuit.
Turning the transistor ON and OFF quickly will also reduce the temperature of the driver transistor.

THE DIODE PUMP (CAPACITOR INPUT PUMP)
Also called a CHARGE PUMP.
And the VOLTAGE DOUBLER

There are two circuits in this discussion that look very similar but produce different results.
Circuit A is called a DIODE PUMP or CAPACITOR-INPUT PUMP or CHARGE PUMP and it produces an output voltage that is never higher than rail voltage.
Circuit B is called a VOLTAGE DOUBLER. However it can be called a CAPACITOR-DIODE CHARGE-PUMP or CHARGE PUMP. It produces a voltage higher than rail voltage.

Circuit A is basically designed to activate a relay when the voltage across the 22u rises above 0.7v. Only

an AC signal will pass through the 10u and when the BC547 turns off, the 4k7 pulls the positive lead of the 10u towards the positive rail. This causes the negative lead to rise too and a voltage appears at the join of the two diodes. The lower diode has no effect at the moment but the upper diode passes this voltage to the 22u and the electrolytic begins to charge. The 10u also charges. The BC547 is designed to turn on after a short period of time and it pulls the positive lead of the 10u towards the 0v rail. The 10u has a small voltage across it at the moment and the negative lead goes below the 0v rail. As soon as the lead goes -0.7v, the lower diode starts to conduct and it discharges the 10u. Only a small voltage of about 0.9v will be left in the 10u and the BC547 is now designed to turn off. The 4k7 pulls the 10u towards the positive rail and the 22u gets a further small amount of charge. As soon as it reaches 0.7v, the BC337 turns on and energises the relay. The 2k2 allows the 22u to charge to a slightly higher voltage than 0.7v so that the relay remains activated a short period of time after the signal from the BC547 has ceased.
This circuit coverts an AC signal into a DC voltage.

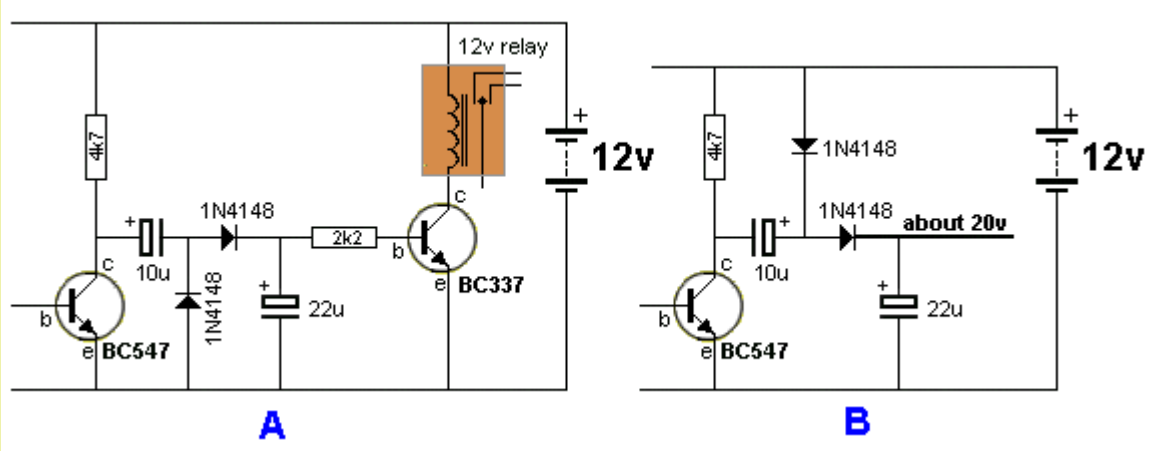

Circuit B is a VOLTAGE DOUBLER. The two circuits appear to be very similar. The component values are the same. We have reversed the 10u and placed the lower diode above the other diode.
The operation of the circuit is completely different.
When the BC547 turns ON, the 10u charges via the top diode. When the transistor turns OFF, the 4k7 pulls the left lead of the 10u towards the positive rail. This pulls the negative lead up and it rises above the 12v rail by about 11v. This puts 12v plus 11v on the left lead of the second diode and it passes this voltage to the 22u. The 22u charges to about 20v.
A practical version of this circuit is in our **50 - 555 Projects** eBook. Battery Charger
A 12v battery can be used to charge another 12v battery by using a voltage doubler circuit and although the full voltage is not required, the circuit automatically adjusts and charges the battery. When the battery is removed, the output voltage rises to about 18-20v.
Circuit C is a **DIODE PUMP** (**VOLTAGE DOUBLER**) from an AC source (such as the "Mains").

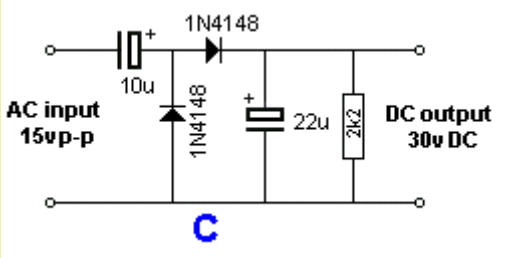

The circuit takes a number of cycles to get up to full output voltage and this is how it works:
The input voltage rises and because the 22u is uncharged, the 10u starts to charge as soon as the 0.6v across the top diode is reached.
The 10u charges to about 10v and puts about 5v on the 22u.
When the AC reverses polarity, the top diode does not have any effect but the lower diode becomes forward biased and it allows the 10u to charge to about 15v.
When the AC reverses again so that the top input becomes positive, the 10u already has 15v on it and the AC adds another 15v.
This means the positive lead of the 10u is 30v above the lower rail and it charges the 22u to about 15v.
This happens a few more times and eventually the 22u gets charged to 30v (minus 2 x 0.6v diode drops).
After 5 or more cycles, the 22u has about 30v across it and the 10u keeps "topping up" the voltage as follows:
Say the 10u has 14v across it, when the top input of the AC becomes negative, the 10u immediately jumps

to a position below the 0v rail and the diode connected to the 10u allows it to be charged to 15v, (the top diode effectively comes "out-of-circuit" as shown in diagram D:

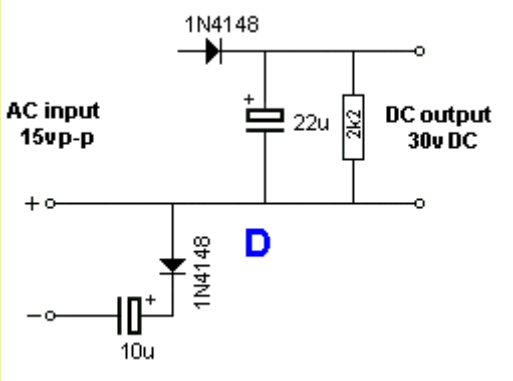

SUMMARY

Here is a summary of the features of the three basic ways a transistor can be connected:

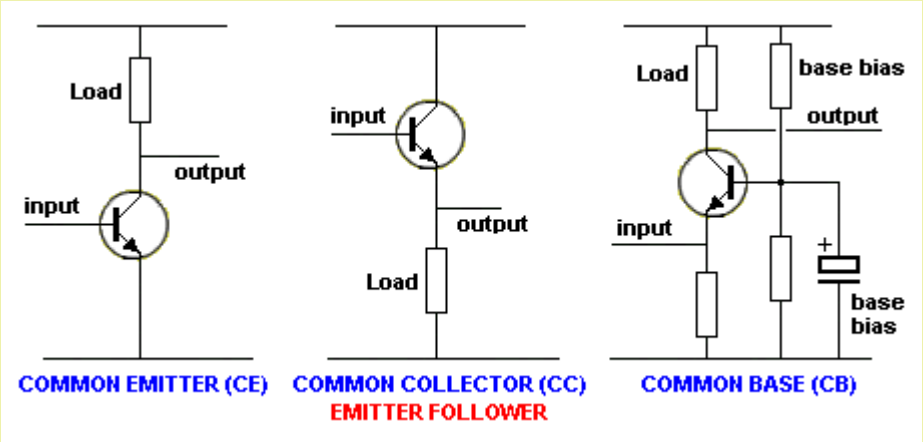

Characteristic	Common Emitter	Common Collector	Common Base
Input Impedance	Medium	High	Low
Output Impedance	High	Low	Very High
Phase Angle	180°	0°	0°
Voltage Gain	Medium	slightly less than 1	High
Current Gain	Medium	High	Low
Power Gain	Very High	Medium	Low

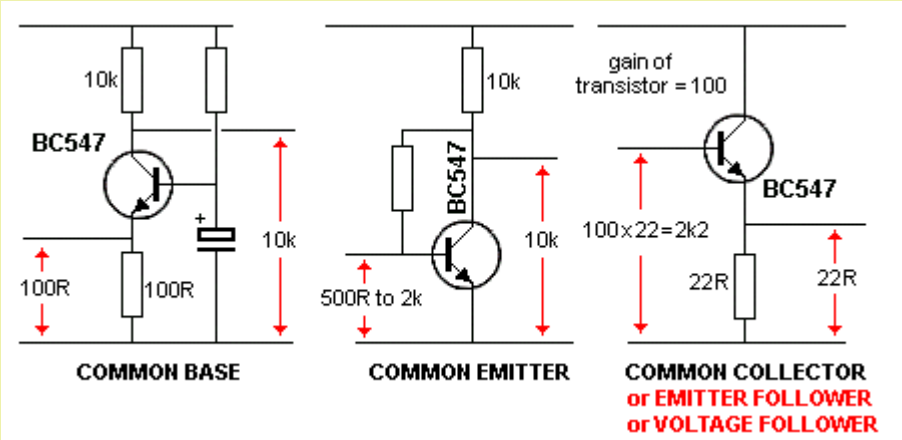

You can see the input impedance of a **COMMON BASE** stage is equal to the resistance of the emitter resistor
it is designed to interface (connect) a low impedance device to the circuit. This is normally very hard to do

as the speaker or inductor may be only 8 to 50 ohms. Trying to connect an 8 ohm device to the input of a 500R stage produces a lot of mis-match and produces high losses. The common base arrangement does this very well and that's why it is so useful.

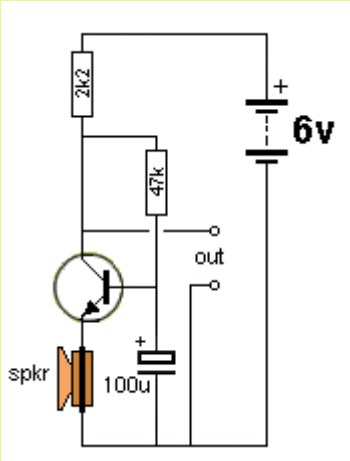

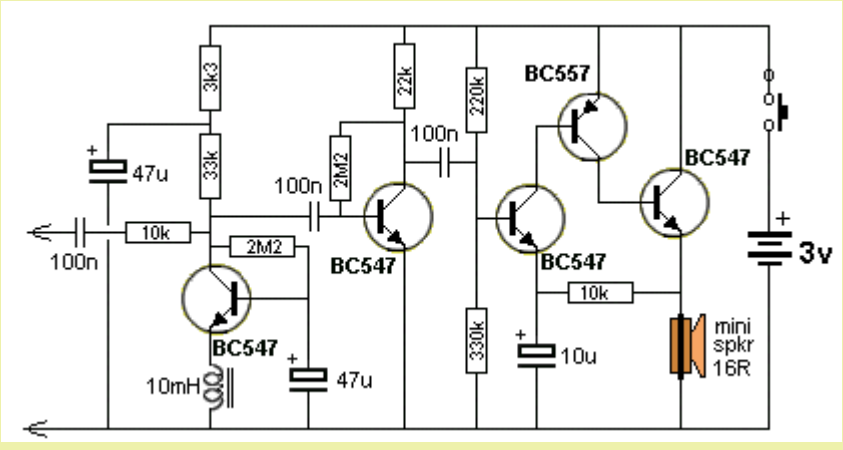

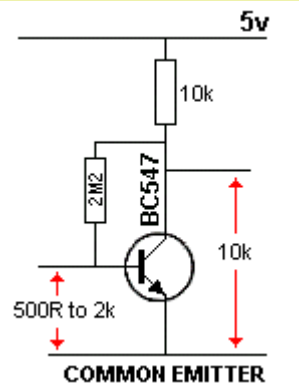

The **COMMON EMITTER** arrangement needs more explanation as the summary above suggests the input impedance is about 500R to 2k.
We have already explained (in **Fig 11**) that a transistor with a gain of 200 will produce a voltage amplification of about 70 in this type of circuit. The reason is the 2M2 base-bias resistor.
It is acting as a feedback resistor and is acting AGAINST the incoming signal.
For example, if the incoming signal is rising, the collector voltage will drop and this will be passed through the base-bias resistor to deliver less current to the base. This is opposing the current being delivered via the signal and that's why it is called NEGATIVE EFFECT or NEGATIVE FEEDBACK. Thus the transistor cannot produce the output amplitude you are expecting.

NOTE:

The value of 500R to 2k2 for the input impedance of a common-emitter stage is very misleading.
You would think the input is like driving into a 2k2 resistor. But this is not the case. Placing a 2M2 between the base and 5v rail will turn the transistor ON fully. The 2uA via the 2M2 is sufficient to turn the transistor ON. This is obviously nothing like driving into a 2k2 and you should avoid thinking about the input as a low value as it only applies when the transistor is heavily conducting.
Transistors will respond to a fraction of a microamp and you should think of them as having very sensitive inputs.

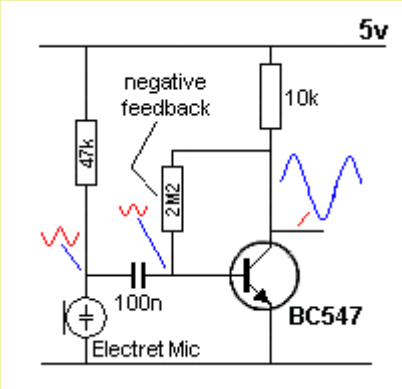

But the question at the moment is this: **What effect does the input impedance have on an incoming signal?**
When a transistor is **lightly loaded**, as shown in the circuit on the left, a very small current into the base will produce an output waveform. It is too complex to talk about input impedance of 500R to 2k. This value does not help us explain the operation when lightly loaded.
The easiest way to talk about the input impedance is to discuss the current entering the base when a signal is applied, by looking at the "voltage waveform". The voltage (signal) on the base can be viewed with a CRO (Cathode ray Oscilloscope) and although we don't know the value of the associated current, the voltage waveforms though the circuit produce an increase of about 70 and this is adequate in most cases.

We see the waveform produced by the electret mic is reduced when it passes through the 100n capacitor. This reduction is due to the impedance (resistance) of the 100n capacitor and also the input impedance of the transistor. Rather than trying to work out all these complicated values, the easiest way to create the required amplitude on the output of the stage is to reduce the 47k. When this value is reduced, the output of the electret mic increases. Talking Electronics uses only high quality electret mics and they require a load resistor of 33k to 68k for 5v supply. Some junk electret mics need 10k or as low as 2k2 and that's why this resistor can range from 2k2 to 68k.
The electret mic will produce an output of about 30mV and the waveform on the base will be about 20mV. With a gain of 70, the collector waveform will be 1400mV.

When a transistor is required to pass a high collector current, the current entering the base is considerably higher than discussed above. When the collector current is approaching the maximum for the type of transistor, a transistor with a gain of 200 will not produce this high gain. The gain will be considerably LOWER. It may be 100 or 70 or even 50. This is why a high input current is needed and it will appear as though the transistor has a low-to-medium input impedance.

Common-Collector

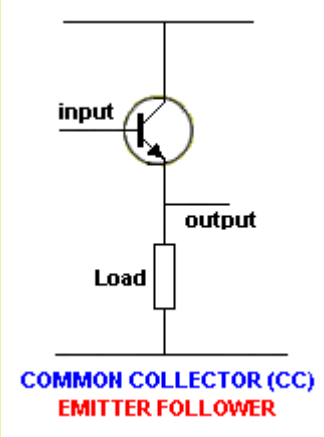

The **COMMON COLLECTOR** stage is also called the **EMITTER FOLLOWER** stage.
The input is the base and the output is the emitter. The collector is connected to the supply rail.
This stage is classified as having a HIGH INPUT IMPEDANCE because the transistor allows you to deliver a high current to the load by supplying a very small current into the base.
In other words the transistor amplifies your effort by about 100 times.
This is due to the gain of the transistor.
When you are doing this, the load appears to be a much-higher value of resistance as the transistor multiplies the resistance of the load by a factor of about 100 times.
That's why the circuit is classified as having a HIGH INPUT IMPEDANCE.

How does the Common-Collector circuit work?

Firstly we will assume you have a voltage of 10v on the base and can deliver 3mA into the base.
What is the voltage on the emitter and how does appear on the emitter?
The transistor amplifies the 3mA by about 100 times and this produces 300mA through the collector-emitter junction. This current flows through the emitter resistor and say it produces 12v across the resistor.
This voltage is higher than the base voltage and this cannot happen. What happens is the current increases and the voltage increases on the emitter resistor until the voltage is 0.6v LESS than the base voltage. At this point the transistor turns off a small amount and the current reduces so the voltage reaches EXACTLY 0.6v less than the base. That's how the voltage on the emitter is 0.6v less than the base. If you raise the voltage on the base, the emitter voltage will rise too. If the base voltage is lowered, the emitter voltage will reduce.
The emitter voltage FOLLOWS the base voltage and that's why we call the circuit **EMITTER-FOLLOWER**.

A "technical" person in a forum said: "Normally don't use a bipolar transistor in common collector configuration for switching loads." This needs some explaining.
If you have an input voltage that rises from 0v to full rail voltage, you can use an emitter-follower circuit.
An emitter-follower is called an IMPEDANCE MATCHING CIRCUIT.
What this means is the transistor is increasing the resistance of the load by 100 times and the previous stage thinks it is delivering to a load that is 100 times higher in resistance.
You could use a common-emitter stage and the result would be the same when you compare the maximum currents but the common-emitter stage will turn ON when the voltage on the previous stage is about 1v and this will cause distortion in an audio amplifier.
If you are driving a motor, an emitter-follower stage will allow you to regulate the speed since the input voltage rises from 0v to rail voltage and the motor will respond to this.
If you are driving a relay, a common-emitter stage will speed up the timing because it will react to the voltage when it has risen about 1v. An emitter follower stage will turn on the relay when the voltage has risen to about 80% of rail voltage.

Common-Collector Problems

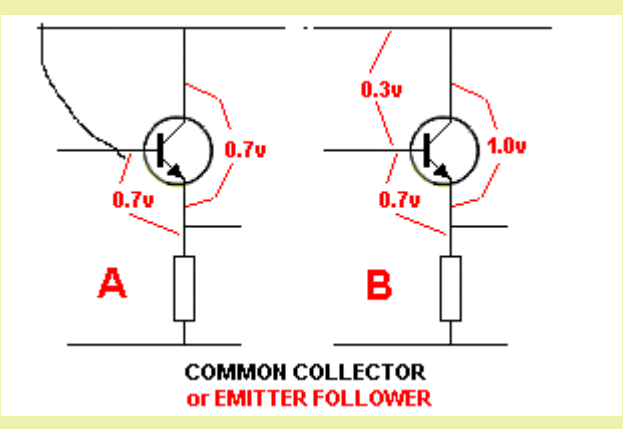

Designing a **COMMON-COLLECTOR** stage has a number of problems. The main one is the voltage dropped across the collector-emitter terminals of the output transistor.
This transistor is also called an **EMITTER-FOLLOWER** and it is always going to have a minimum voltage-drop of 0.7v when the base is at rail voltage. But in most cases the base will be less than rail voltage by at least 0.3v. This means the voltage across the transistor will be 1v.
A transistor in a common-emitter configuration will be about 0.2v. This means the common-collector arrangement will be 5 times hotter (approx) and the load will get 0.8v less voltage.

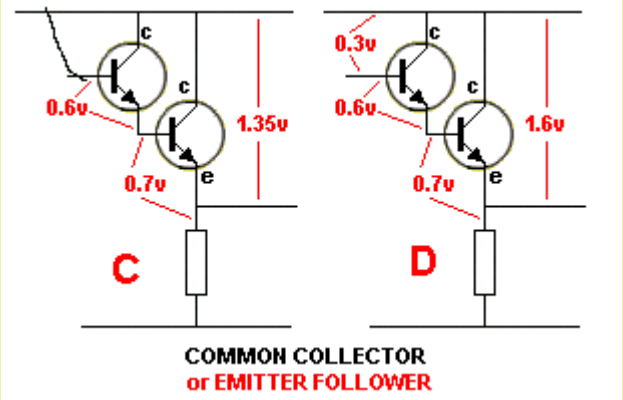

The situation gets worse when a Darlington pair is connected as a common-collector output. The voltage across the two transistors will be a minimum of 1.35v and will normally be **more than** 1.6v.

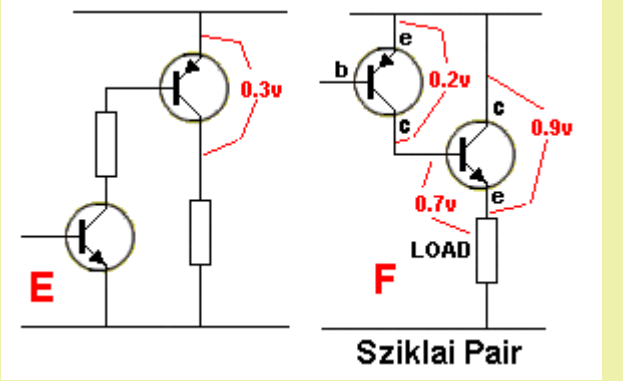

Figs E and **F** show some solutions to driving a load with the most-efficient design.
Fig E is called a NPN/PNP pair and **Fig F** is a Sziklai Pair.
Only the important voltage-drops have been shown and these values will be higher for some transistors and will also increase as the current increases.
This is just an example of the minimum values to expect.

THE TRANSISTOR AS A VARIABLE RESISTOR

Many circuits use a transistor as a variable resistor but this fact is never mentioned.
There are many ways to look at how a transistor is operating and one of them is to see the transistor as a VARIABLE RESISTOR.
In fact, that is what the transistor is doing in 99% of circuits. It is acting as a VARIABLE RESISTOR.
In a digital circuit, the transistor is turning OFF completely then turning ON fully. This is equivalent to a very high-value resistor in the first instance, then a very low-value resistor.
In an audio circuit, the resistance of the transistor is reducing then increasing. It is working in series with a LOAD resistor and the voltage at the join of these two is the OUTPUT of the stage.
For a common-emitter stage, when the resistance of the transistor decreases, the output is LOW (meaning the output voltage is small) and when it increases, the output is HIGH.
The transistor and the load resistor form a VOLTAGE DIVIDER and the voltage at the join of these two components depends on the value of the transistor.
When the resistance of the transistor is equal to the load resistor, the voltage at the join will be 50% of the supply. When the resistance of the transistor is twice, the voltage will be 66% and when it is half, the voltage will be 33%.

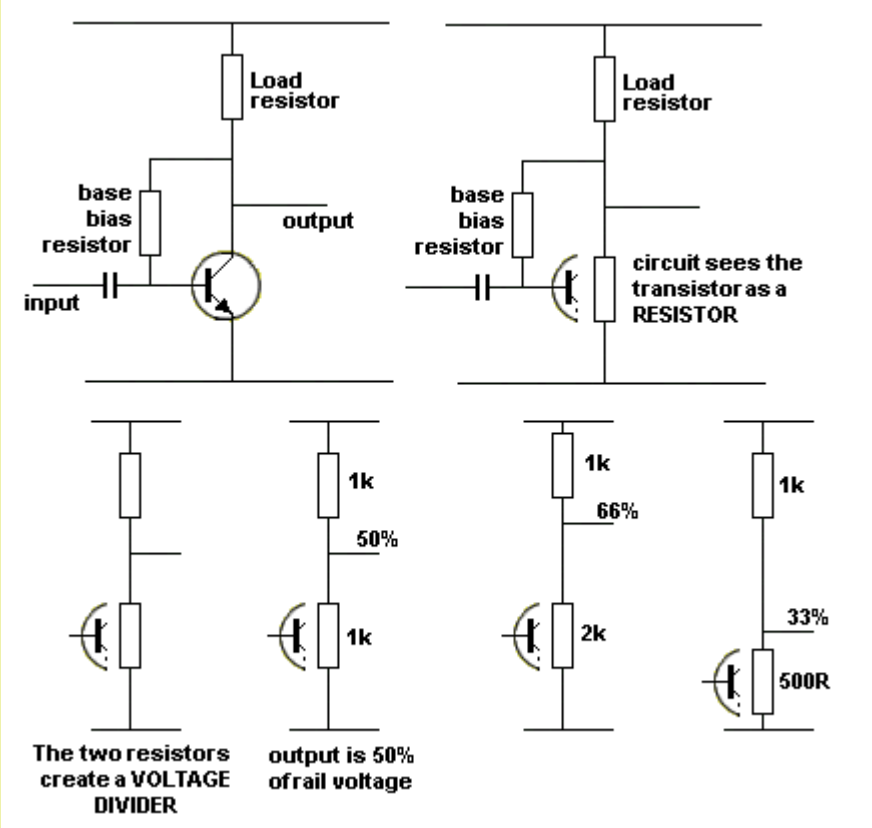

The transistor as a VARIABLE RESISTOR

THE LIGHT DEPENDENT RESISTOR

The Light Dependent resistor (LDR) is a variable resistor. Its resistance varies according to the amount of light it receives.
It's a very simple component and can be connected directly to a transistor so the change-in-resistance of the LDR can be amplified about 100 times.
Even though this arrangement is very simple, it takes a lot of understanding to design a suitable circuit and see HOW IT WORKS.
An LDR has a resistance of about 300k when in total darkness and as low as 200 ohms in bright light.
But it is very difficult to turn a light ON and OFF to get this extreme range in resistance.
In most cases the change will be a LOT LESS.
The actual value of resistance will depend on the type of LDR and the light-conditions.
There are 4 ways to connect an LDR to a transistor:

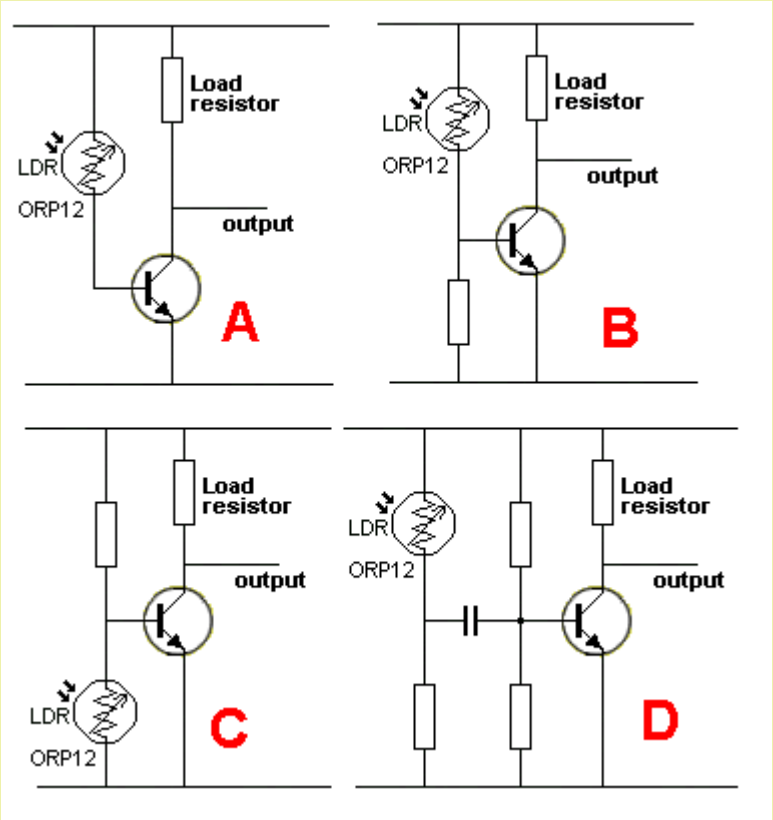

How do you connect an LDR?

Circuit A only works when the light drops to zero.
Circuit B produces a LOW on the collector when light is detected.
Circuit C produces a HIGH on the collector when light is detected.
Circuit D detects a CHANGE in light conditions.
There are **TWO WAYS** to see how an LDR works.
1. It delivers a **CURRENT** according to its resistance.
2. It it part of a **VOLTAGE DIVIDER** when connected in series with another resistor.

In the first circuit, **Circuit A**, the LDR acts as a current-limiting device - or more-accurately A CURRENT-DELIVERING DEVICE and the output will be HIGH when the LDR does not receive any illumination, providing the LOAD resistor is a small value.
This is the reason: The resistance of the LDR will be 300k and the transistor will effective reduce this value to 1k and produce a voltage divider of 1k:load resistor. If the load resistor is 470R, the voltage on the output will be 66% of rail voltage.
When light falls on the LDR, it resistance decreases and if it reduces to say 5k, the transistor will convert this to 5,000/200 = 25 ohms and the output of the circuit will go LOW.
If the LOAD resistor is 10k, the LDR in dark conditions will provide a resistance of 300k and the transistor will convert this to 1k. The ratio of 1k:10k will mean the output of the stage is LOW for both dark and light conditions.
Thus the resistance of the LOAD resistor must be selected for the light conditions experienced by the LDR and the gain of the transistor.
Circuit B effectively makes the stage less sensitive to changes in illumination on the LDR.
The base resistor allows some of the current supplied by the LDR to flow to the 0v rail. This means the transistor gets only some of the current and more light has to shine on the LDR for the circuit to change states.
The actual current "bled-away" by the base resistor is very complex to determine and requires mathematics beyond the scope of this discussion.
However we can say the base resistor is normally between 100k and 1M and the LOAD resistor between 1k and 10k. In this circuit, the output goes LOW when the LDR receives illumination.
In **Circuit C**, the output goes HIGH when the LDR detects light.
The base-bias resistor is normally between 2k2 and 10k and the LOAD resistor between 1k and 10k.
This gives an enormous range of operating parameters (current taken by the circuit) and we can simplify the discussion by saying this:
The base-bias resistor forms a voltage divider with the LDR and when the voltage on the base is 0.55v, the transistor starts to turn OFF. At 0.45v the transistor is OFF. Light must be directed onto the surface of the LDR and it will reduce the effective resistance on its terminals. The intensity of the light to turn the transistor OFF will depend on the value of the base-bias resistor.
In **Circuit D**, the output will change when a hand is waved over the LDR. This causes the resistance of the LDR to increase then decrease.
The voltage at the junction of the LDR and the resistor to 0v will fall the rise again.
The transistor can be biased ON slightly or OFF via the two resistors on the base and when the voltage on the "output of the LDR" changes, the change is passed through the capacitor to change the state of the transistor.

HIGH IMPEDANCE

If you want to go into a more-complex discussion, here it is:

The LDR needs to feed into a HIGH IMPEDANCE stage because it is classified as a high impedance device.
It is only capable of passing (delivering) a small current, that's why it is called a HIGH IMPEDANCE component.
The transistor is called a BUFFER (or amplifier) as it amplifies the current.
The transistor is a BUFFER because it "joins" the low-current capability of the LED to the high-current requirement of a LED - just like the buffer at the end of a carriage on a train or the old-fashioned bumper on a car (containing springs).
A HIGH IMPEDANCE stage accepts very small currents and amplifies them.
If the LDR is connected to a low-impedance stage, the current it is capable of delivering will enter the transistor and the collector voltage will change VERY LITTLE. This is because the transistor needs a higher input current. The LDR is not capable of delivering this high current and the output of the circuit will NOT CHANGE or only change a VERY SMALL amount. A low-impedance stage has say 2k2 resistor on the base and 100R on the collector.
We use the word "IMPEDANCE" because if we measure the values with a multimeter, the "resistance" of the junction of the transistor is also measured and since this is a diode, its "resistance" changes according to the current flowing and is not a fixed value. Whenever a capacitor, diode or coil is included in the circuit we are measuring, we call the value an impedance to show that we are taking into account the inclusion of the other component(s).

SHORT CIRCUIT CURRENT / shoot-through current

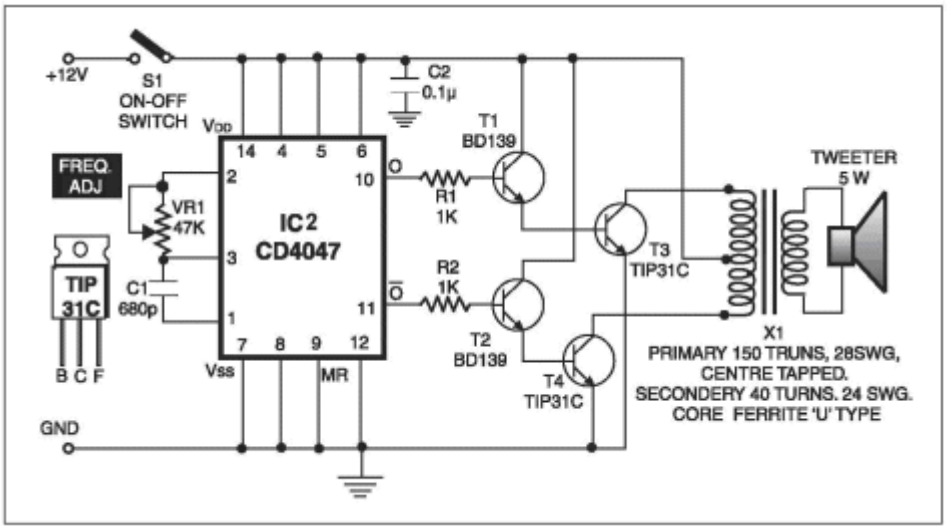

Here is one of the major hidden problems when designing a circuit.
It's called a **SHORT CIRCUIT current** or "**Shoot-through**" current and occurs when two transistors are directly connected together as shown in the output section of the circuit on the left.
The chip can deliver about 10mA to the base of the top transistor and if the transistor has a gain of 100, the collector-emitter current will be 1AMP !!

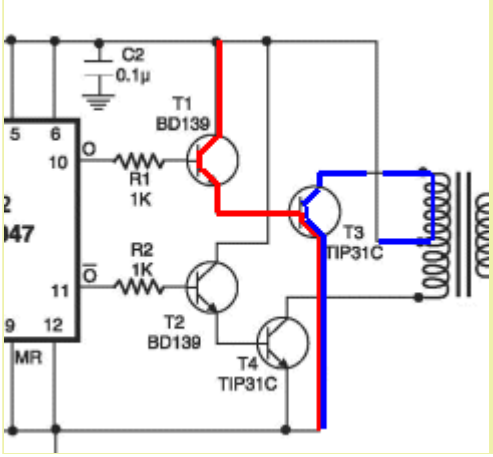

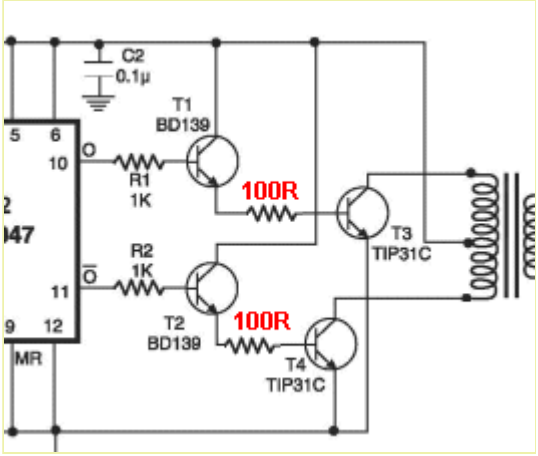

This current will also flow through the lower transistor and is WASTED CURRENT. It creates an almost SHORT-CIRCUIT across the supply rails.
The solution is to add a low value resistor such as 100R to limit the current.

NO CURRENT . . .

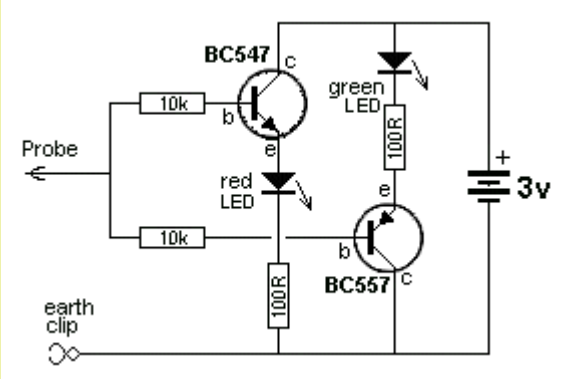

No ON-OFF switch needed

In all the circuits we have discussed, there is a small quiescent current flowing when the circuit is "sitting around" doing nothing - called the "Quiescent Current." This current is the biasing current and is needed to turn the transistor(s) ON slightly so it will amplify the smallest signal. If the transistor is not turned on slightly, it will not amplify signals smaller than 600mV as the base must see a signal more than 550mV for the transistor to start to turn on.
The circuit above is a LOGIC PROBE and will detect a HIGH or LOW on a digital circuit where the waveform is higher than 2.5v. This circuit can be in a state of "cut-off" (not conducting) and the input amplitude will turn the circuit ON.
The clever feature of this circuit is the lack of an ON-OFF switch. The circuit takes no current when not detecting a waveform because the voltage-drops across the semiconductor junctions is greater than 3v (and the supply is 3v).
To turn on a transistor, the voltage between the base and emitter must be greater than 550mV. But if the voltage is less than 550mV, absolutely no current flows through the junction.
The same applies with the characteristic voltage of a LED. For a red LED, the characteristic voltage is 1.7v but if the voltage is less than about 1.5v, no current will flow. The same applies to a green LED. Its operating characteristic voltage is 2.1v to 2.3v but when the voltage less than 1.9v, no current will flow.
The current-path for the circuit in "idle mode" is through the green LED (1.9v), 100R, the emitter-base junction of the BC557 (0.55v), through two 10k resistors, the base-emitter junction of the BC547 (0.55v), the red LED (1.5v)100R to the 0v rail.
When the minimum voltages are added we get 4.5v. But the supply is only 3v and thus it is not high enough to meet all the minimum junction voltages.
Thus no current will flow through the circuit when "sitting around."

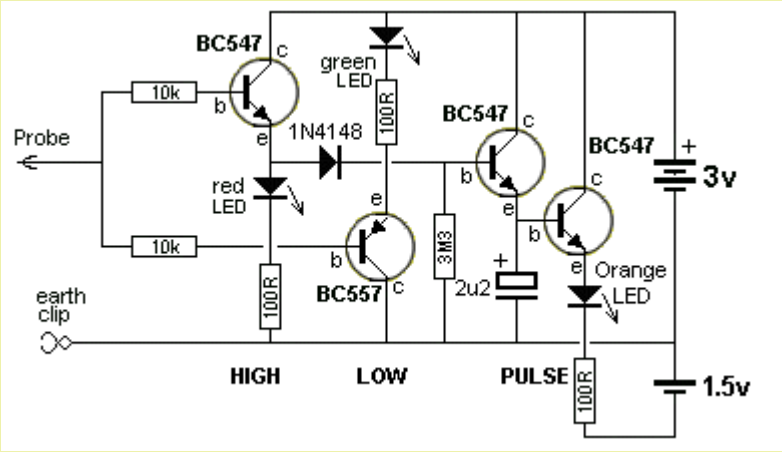

LOGIC PROBE with HIGH, LOW and PULSE

The same "cut-off" condition applies to the **Logic Probe** circuit above. But this time an orange LED is added to the circuit.
The Pulse LED is connected to the HIGH section of the circuit and its illumination is extended by the inclusion of the 2u2 electrolytic so a brief pulse can be observed.
To extend the illumination of the orange LED, we need to charge this electrolytic.
But an electrolytic needs a lot of current to charge it quickly and the input of a Logic Probe is HIGH IMPEDANCE - in other words it has no "charging capability."
This means the pulse from the input needs a lot of assistance to charge the electrolytic.
To do this we have used 2 transistors. The first and third transistors form a SUPER-ALPHA pair and this provides a lot of "strength" (current) to charge the electro.

But we can only charge a very **small-value** electro, so we need another transistor to ELECTRONICALLY increase the value of the electro about 100 times. That's the purpose of transistor four.
We now have the circuit we need to extend the illumination of the pulse LED.
But when all these components are connected, we have run out of voltage to illuminate the LED with a HIGH of 3v.
To solve this problem we have added a single 1.5v cell as shown in the diagram. The emitter of the 4th transistor will have about 1v on it (with reference to the 0v rail) and the lower lead of the 100R will have minus 1.5v (with reference tot he 0v rail). This means the orange LED and 100R will see a voltage of 2.5v. This is sufficient to illuminate the LED.

Producing a Negative Voltage

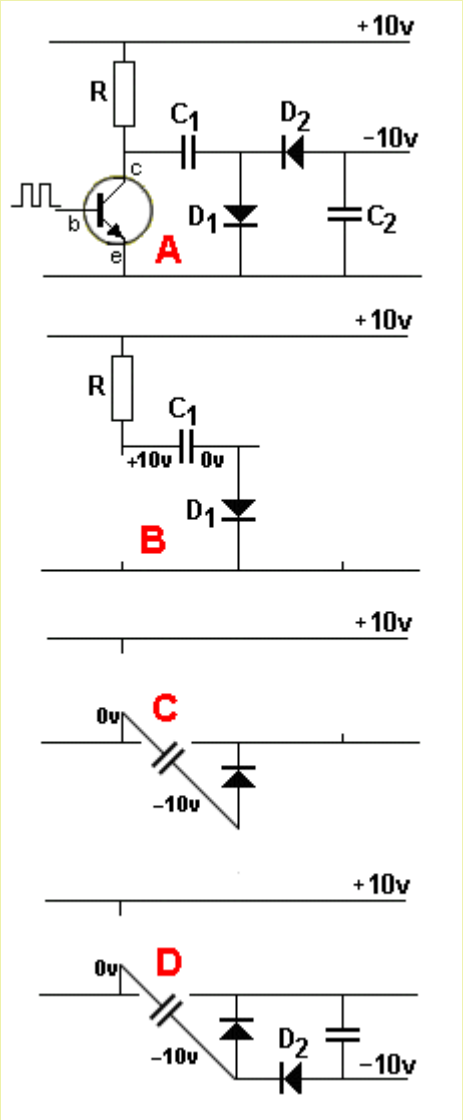

A negative voltage can be produced from a positive voltage with a circuit called a DIODE PUMP or DIODE CHARGE PUMP. In its simplest form it is called a VOLTAGE INVERTER.
To create the negative we use the circuit on the left, as shown in fig **A.**
The transistor is fed a signal. It can be a square-wave, sinewave or audio waveform. All it has to do is turn the transistor ON and OFF and the voltage on the collector will range from nearly 0v to nearly rail voltage.
This waveform is passed to the voltage-doubling circuit via a capacitor. Let's see how the two capacitors and two diodes produce a negative voltage.
The cycle starts with circuit **B**. The transistor is OFF and capacitor C1 is connected to the positive rail via the resistor **R**. It charges to about 10v via the resistor and diode D1(actual voltage will be about 9v).
When the transistor turns ON, the left lead of the capacitor will drop to the 0v rail and the right lead will drop 10v BELOW the 0v rail. The diode will "flip over" but it will not conduct when the anode lead is negative.
This is the most important part of the discussion. The right lead of the capacitor produces the NEGATIVE VOLTAGE. This is shown in circuit **C**.
In circuit **D** we connect D2 and the cathode of D2 is negative. This will make D2 conduct and the anode of D2 will also be negative by about 8v to 9v and this will pull the lower lead of C2 DOWN by a voltage of about 8v to 9v and create the negative output of the circuit.
We have shown the output to be 10v, but each diode will lose (drop) about 0.6v and the capacitor will not charge fully so the output will be about 8v.
When the transistor turns OFF, the left lead of C1 will rise to about 10v and because the capacitor is fully charged, it will not charge any more. It has done its job.
However, if the output of the supply delivers a current, the output voltage will fall and the capacitor will not have 10v across it. In this case is will charge a small amount and restore the output to -10v.

NEGATIVE VOLTAGE

Many circuits produce a negative voltage or negative spike at some point in the circuit. In other words the voltage will be LESS than the 0v rail of the circuit. The circuit above is a good example and this negative voltage is stored in the second capacitor.
But some circuits do not store the effect and and the generation of the negative voltage is not realised. That's why you have to know how a negative voltage can be generated, so you can be aware of its generation.
It is due to the presence of a capacitor and the animation below shows how a capacitor can produce a negative voltage:

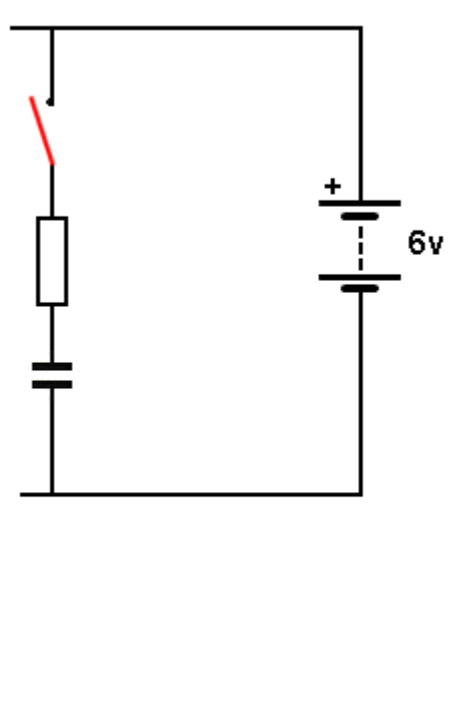

When a charged capacitor is lowered from a "high" position in a circuit, the positive lead may be lowered by say 3v. This means the negative lead will be lowered by 3v. (we are assuming the capacitor can be lowered and is not directly connected to the 0v rail). The result is a voltage on the negative lead that is "less than" the 0v rail.
Generally, this "spike" or voltage is not obvious and the voltage "stored in the capacitor" does not "go negative." That's why this effect may be missed in a circuit.

You can see the electrolytic produces a NEGATIVE VOLTAGE on the base of a transistor in the following animation, when the transistors change state:

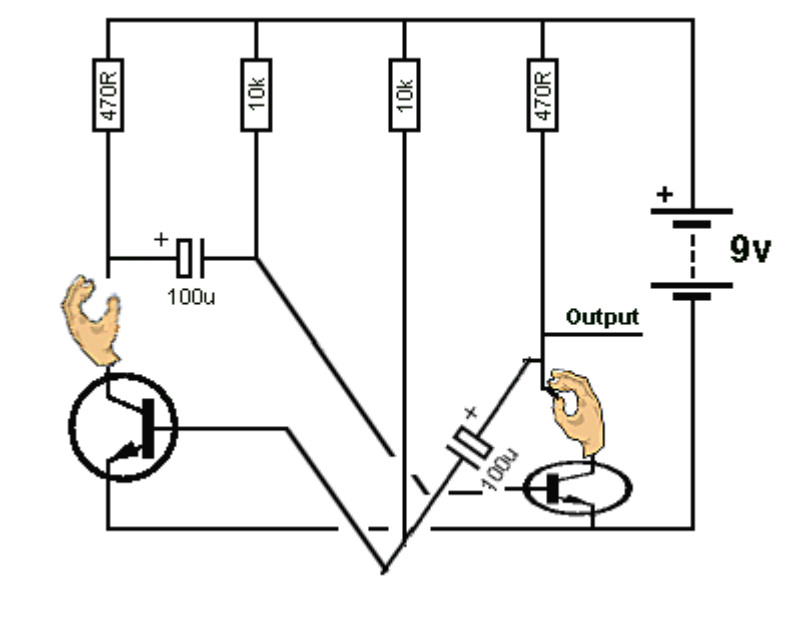

Many transistors don't like a negative voltage on the base and they can be destroyed due to this effect if the supply voltage is vey high. And you will wonder why the transistors are being destroyed !!

THE POWER SUPPLY

We are not going into designing a power supply but want to cover one of the mayor misconceptions about a power supply:
A lot of readers to a Forum have asked: **I want a 20mA power supply, but all I can find is a 100mA supply. Will this BURN-OUT my project?**

Answer: If the project is correctly designed and requires 20mA when connected to a 12v power supply, it will take exactly 20mA and not burn out.
If the project requires 100mA, it can be connected to a 100mA power supply and it will work correctly.
If the project requires 200mA and is connected to a 100mA power supply, the power supply will deliver 100mA (and maybe a little more) but the voltage will start to fall when the full 200mA is required and the power supply will get very hot. The project will not be damaged but it will not perform to its full capability.
See 200 Transistor Circuits: 1-100 101 - 200 for projects on Power Supplies.

RE-CAPPING

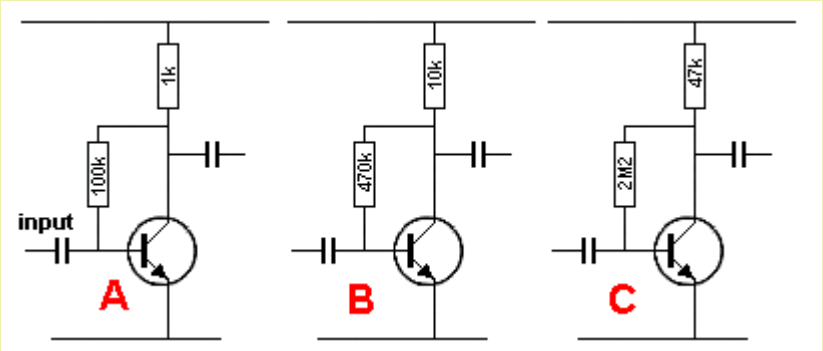

Let's go over a number of design-features we have mentioned in this discussion.
The three diagrams on the left show a self-biased transistor with approx half-rail voltage on the collector.
What is the difference between circuits **A**, **B** and **C**?

We have shown that passing the energy (the size of the signal) from one stage to the next, depends on the value of the load resistor. A low-value resistor will pass more energy. Thus circuit **A** will pass more energy.
We have also shown the value of the coupling capacitor (this is the same in all circuits above) and the value of the base-bias resistor determines the amount of energy that will be transferred.
Circuit **C** will have the least effect on attenuating the signal because the transistor is turned on via the smallest amount of base current (the highest-value base-bias resistor) and thus the input impedance is the highest.
The third factor to consider (for battery operated devices) is quiescent current. Circuit **C** takes the least current.
The three circuits above will have the same gain but when they are connected to a following stage, circuit **A** will deliver more signal-amplitude and the amplitude of circuit **C** may drop to almost zero because the input impedance of the following stage will be so low that the energy from the 47k will produce a very small waveform under "loaded conditions."
Now you know what causes the problem.

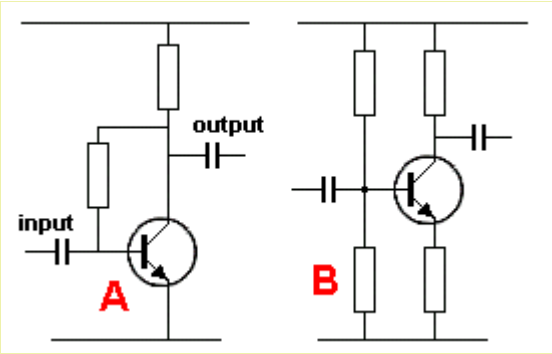

There are basically two ways to bias a transistor. Circuit **A** is called **SELF-BIAS** and circuit **B** is a **BRIDGE**.
We are assuming all resistors are correct to get half-rail voltage on the collector.
Circuit **A** will maintain mid-rail-voltage over a wide range of supply voltages without having to change any of the resistor values. Changing the transistor for one with a different gain will alter the collector voltage by a small amount. It is a very reliable and stable circuit.
The only problem is the gain of the stage. It is about 70 for all types of transistors because the gain is reduced by the feedback effect of the base-bias resistor.
The collector voltage for circuit **B** will change considerably when the supply voltage is changed and if the transistor is changed for one with a different gain.

If an electrolytic is connected across the emitter resistor, the gain of the stage can be as high as 100 but it is best to keep each stage below 100 and use more stages. This will prevent circuit-instability such as "motor-boating" and "squealing."

DESIGN VALUES

This is one of the most important topics when designing a circuit. It has never been mentioned before in any text book.
When designing a circuit, each value of resistance and capacitance has a "correct value." In other words, what me mean is this: When a "qualified" electronics engineer sees a circuit, he expects to see a certain value of resistance or capacitance for every component and when this value matches his understanding, he understands the circuit is operating exactly as expected. If the value is 50% higher or lower, it can still be within the expected range, but when the value is 10%, he will look into the reason for the variation.
Most circuits can tolerate a wide range of values, however certain values are chosen to indicate the fact that

the value is non-critical.
We call these values "design values" and are the first values you think of when designing a circuit.
If a circuit needs a slight adjustment, these values will be increased or decreased slightly and and when an engineer see this, he understands the values are fairly critical.
That's why you don't use 12k instead of 10k or 560R instead of 470R when the "design values" will work perfectly.
You are simply introducing unnecessary complexities into the circuit and reducing your status as a "design engineer."
We are still seeing engineers creating a circuit with a parts list and when the circuit is displayed on Google, it has no values!
Finally, remember to lay-out a circuit using symbols and not line-diagrams of a chip with pin numbering 1,2,3,4 etc. A schematic has nothing to do with parts-placement and a block diagram of a chip tells you nothing about the function of the chip.

SPLIT POWER SUPPLY

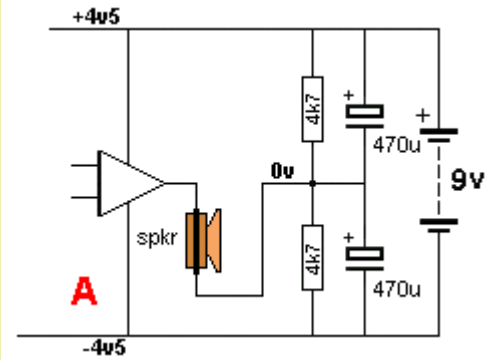

Some circuits need a voltage that is identified as 0v voltage at a particular connection and a positive voltage and a negative voltage.
The reason for this is the output of the circuit has a voltage that is half-way between the voltage on the top rails and the bottom rail and it produces a signal that rises almost as high at the top rail and almost as low as the bottom rail.
This means the amplifying circuit, such as an op-amp or AMPLIFIER, requires a voltage that is equally POSITIVE and NEGATIVE, with the earth, or chassis or neutral classified as having zero voltage. In other words it is the reference point (0v) for all the other voltages.

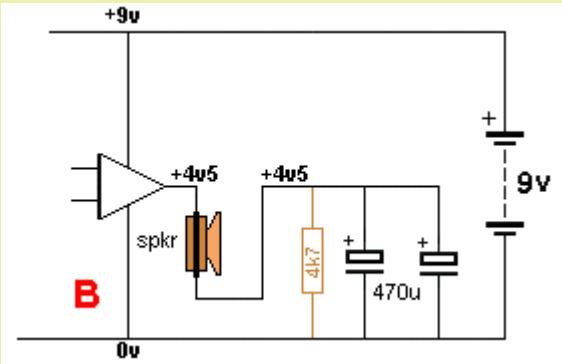

As far as the output is concerned, the two 470u electrolytics are connected in PARALLEL and prevent the bottom lead of the speaker moving, when a signal is delivered to the top lead.
The do not prevent the bottom lead moving like a fixed connection but limit the movement or restrict the movement just like a 2 ohm resistor.
A 100Hz, the two 470u electrolytics have a resistance (impedance) of slightly less than 2 ohms and at a higher frequency this value is a lot less. That means most of the signal will appear across the speaker.
In How A Capacitor Works we explain how you "see" the electrolytics working.

INDUCTION

Here's a new term.
It is **INDUCTION** and it means a circuit or transistor is turned ON or OFF by a voltage produced by a field. It means there is no direct wiring between the two circuits and and they are linked by a magnetic field or flux.
This is sometimes called TRANSFORMER ACTION.
The field from one winding **INDUCES** a field near another winding and this field produces a voltage and current to operate or drive of affect the other circuit.
This effect is identified by the fact that the two windings **DO NOT TOUCH**. The only thing that couples them is the magnetic flux.

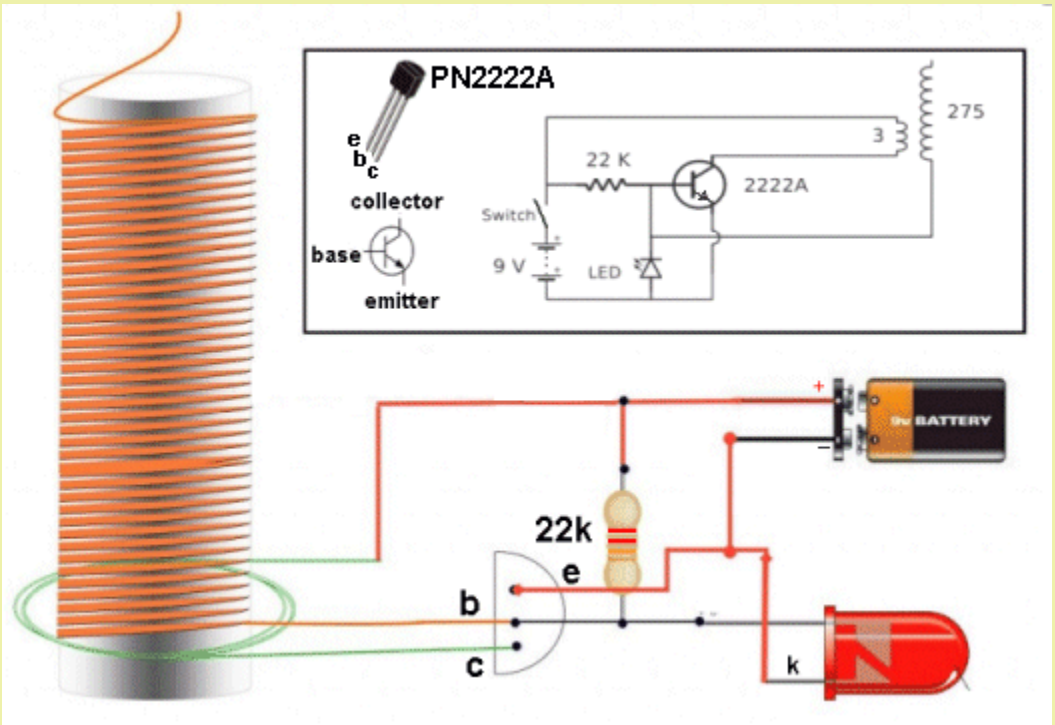

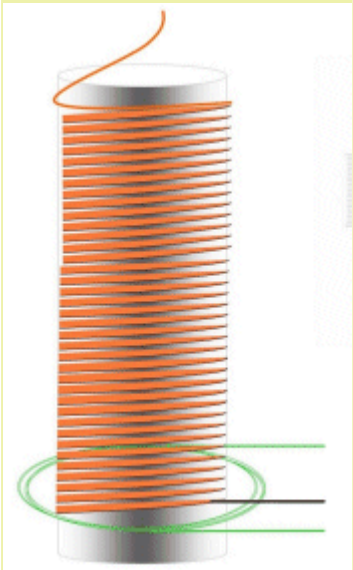

In the circuit above the transistor oscillates and produces a very high voltage at the the top of the coil.
The centre of the coil is a magnetic material such as ferrite. This is important
as it delivers the flux produced by the 3-turn winding to the 275 turns of the transformer.
Removing the ferrite core will leave air to do the transfer and air is not as good as ferrite as transferring the magnetic flux. Ferrite is up to 1,000 times better.
The circuit is turned on a little bit by the 22k on the base and this produces a small amount of flux in the 3 turns.
This flux cuts the 275 turns and produces a voltage. Because the 275 is only connected at one end, we have to explain how it works.
The voltage produced by the 275 turns comes out both ends of the winding and it will be a negative voltage out one end and a positive voltage out the other end.
The winding is connected so the positive voltage comes out the bottom and even though the top of the winding is not connected to anything, the voltage out the bottom will deliver a small current to the base of the transistor and turn it ON more.
This increases the magnetic flux and the transistor turns on until it is fully turned ON.
Up to this point in time the magnetic flux is called EXPANDING FLUX and it is capable of cutting the 275 turns. But when the transistor is fully turned ON, the flux is a maximum but it is not expanding. It stops EXPANDING. It is STATIONARY FLUX and the voltage produced in the 275 turns immediately STOPS.
The transistor turns OFF immediately because the voltage (and current from the 275 turns stops being delivered to the base) and the flux in the magnetic core collapses. It collapses because the current delivered by the transistor STOPS.
The collapsing of the magnetic flux produces a voltage in the 275 IN THE OPPOSITE DIRECTION and the voltage out of the bottom of the winding is NEGATIVE. This turns the transistor off fully and a very high voltage is produced in the winding because the magnetic flux collapses very quickly.
This is the spark or CORONA or HIGH VOLTAGE produced by the "Tesla Coil."
When the magnetic flux has full collapsed (and converted to a very high voltage), the voltage ou of the bottom of the 275 turns is zero and the transistor gets turned on a small amount by the 22k to start the next cycle.
Because the 275 turns is only connected at one end, the energy into the base can only be very small because the winding does not have at connection at the top to act as a "fixed point" to deliver a high current.

It's like trying to push a car while standing on a skateboard. The voltage has a "little bit of grip" as it expands and this is just enough to get the circuit to work.
In actual fact, the voltage out to bottom of the winding is just as high as the top spark, but the base of the transistor converts this energy to a small voltage and small current to turn the transistor ON.
This gives the winding a "fixed point" to produce a spark at the top.
The high voltage is INDUCED or PRODUCED in the 275 turns when magnetic flux in the core collapses very quickly.

DECOUPLING

Decoupling is done with capacitors. To understand how a capacitor works, read this article:

HOW A CAPACITOR WORKS It has animations to show a capacitor charging.

Decoupling is soldering capacitors or electrolytics to a circuit to prevent signals from one stage entering another and creating a problem. And there are other explanations too. There are quite a number of words and terms that are used for capacitors in a certain location in a circuit.
The problem might be squealing, motor-boating or causing a stage or an output to pulse or operate at the wrong time. Or another 10 problems. We will only cover a few.
The capacitor (electrolytic) absorbs the unwanted signal (by charging and discharging) and this is how it is removed. You can also say the capacitor prevents the voltage rising or falling because the voltage is actually a very narrow pulse of high amplitude.
The capacitor converts this waveform into a low voltage - by simply absorbing the energy contained in the waveform. What the capacitor is actually doing is absorbing the energy and releasing it during another part of the cycle.
Whenever a device such as a relay or speaker is activated, it takes additional current and the voltage of the supply drops a small amount.
This "dip" is transferred to the previous stages (or other stages) and these stages can be sensitive to very small changes in voltage.
In the circuit below, the first stage thinks the noise is due to the signal from the radio station and it gets amplified along with the real signal the station.
The signal eventually appears in the speaker and is then transferred to the supply rail as a "glitch" or "spike" where it is again passed to the "front-end."
Very soon the signal is amplified sufficiently to produce a squeal or "putt-putt-putt" noise called "motor-boating."
Audio amplifiers and radios are particularly difficult to design because you need an enormous amount of amplification and this allows feedback in the form of squealing to be produced.
The following circuit has this problem and the cure was to add a 22n to the output stage to prevent the high frequency signals being amplified and cycled through the circuit.

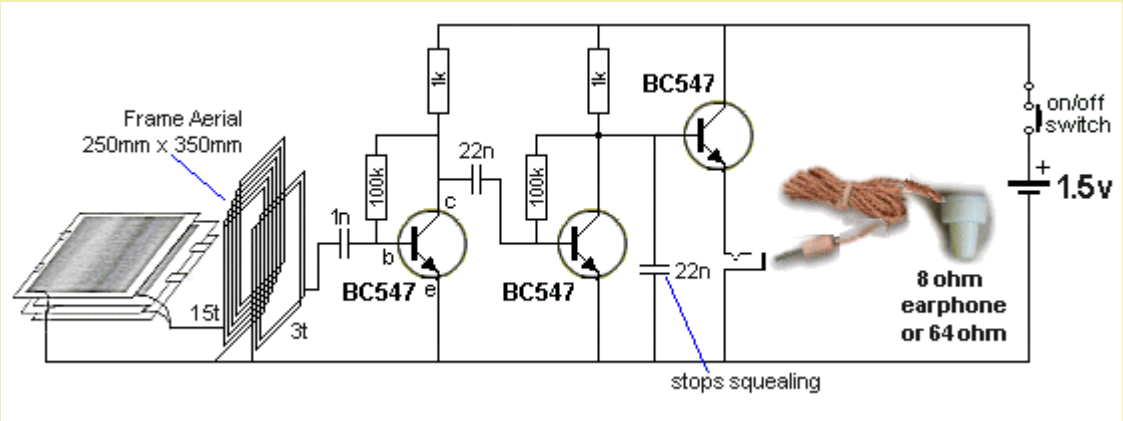

The layers of aluminium foil between cardboard form a tuning capacitor to select the stations.

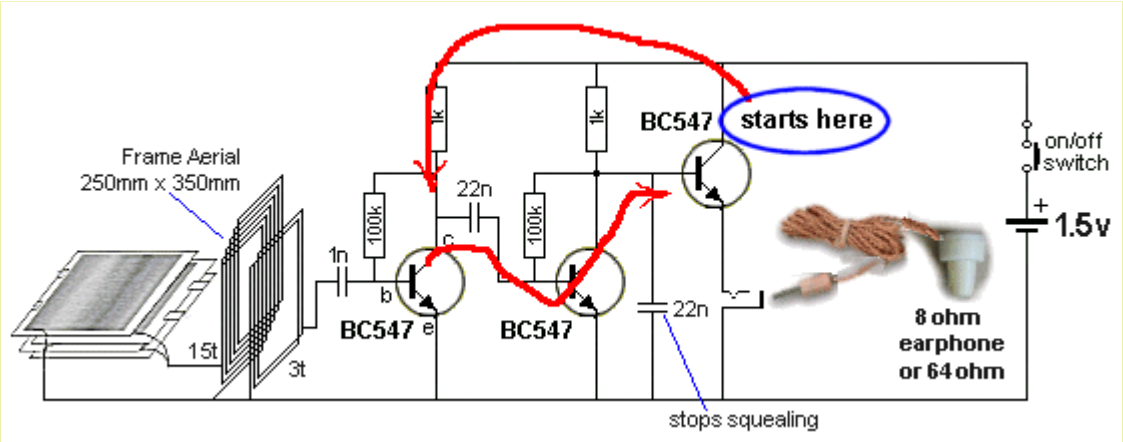

The unwanted signal starts at the output because a loud signal takes more current and this causes the supply voltage to drop. It puts a pulse on the top rail.
This pulse is passed to the first transistor where it is amplified about 50 times.
The second transistor amplifies it another 50 times and it cycles around the circuit again and again and again - each time getting louder and louder.
The 22n absorbs the signal and prevents most of the squeal.
This is an unusual form of decoupling and it is classified as DECOUPLING because the intention of the 22n is not to alter the audio but remove the squeal.

BATTERY DECOUPLING simply means the decoupling component(s) are near the battery.
In the following circuit the 22n is across the wires that come from the battery.

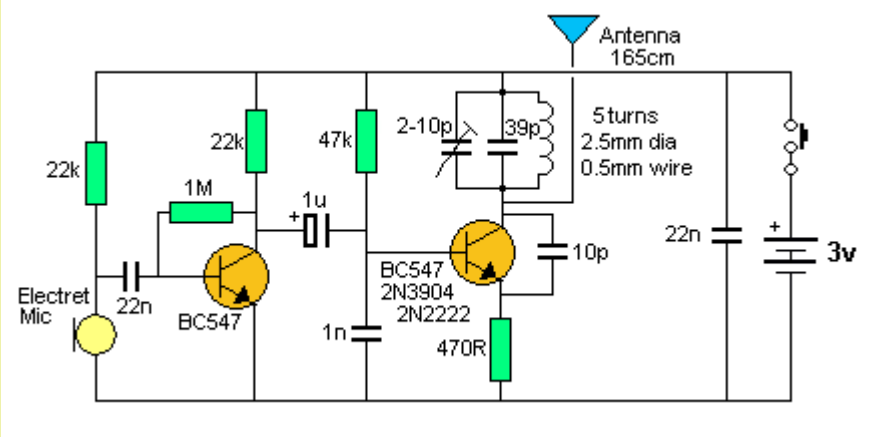

The circuit above is called a high frequency circuit (90MHz) and the wires and leads and tracks on a printed circuit board from the battery to the circuit are 100 times more critical than an audio circuit.
Let me explain why.
The coil in the diagram is wound with wire but it can be created by using a zig-zag type track on the PC board or a circular track like a snail-shell. It only has to be 5 turns and if one end is held stationary, the other end will have a signal equal to about 6v on it.
This shows what can happen with a short length of track.
Where the coil meets the top rail in the circuit above, the join is trying to move up and down at 90MHz and if the track between this junction and the battery is long and thin, it will become part of the coil and start to move.
Two things will happen. It will change the frequency of the circuit and, because it does not have a 39p capacitor across it, the energy delivered to it will be lost.
The 22n effectively tightens up the power rails and prevents them moving.
We also say the 22n reduces the **impedance of the rails**.

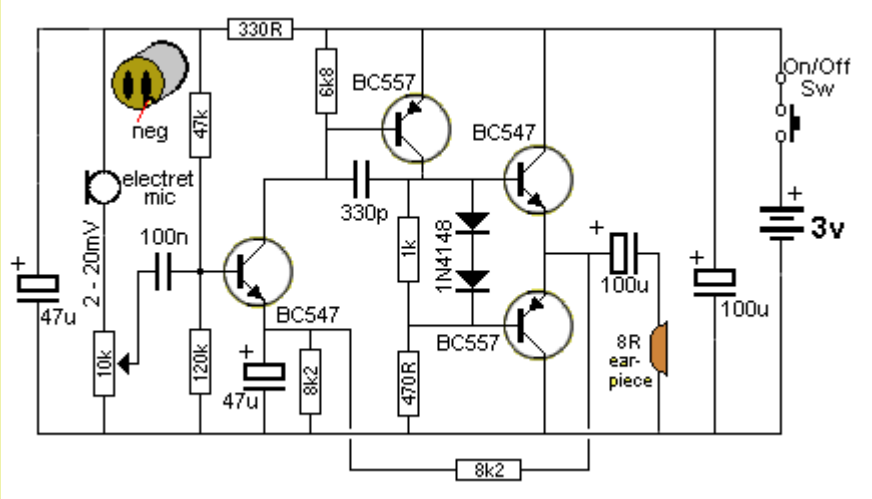

Decoupling is improved enormously by adding a resistor in series with the capacitor (electrolytic).
In the hearing-aid circuit above, the second 100u across the battery is designed to improve the performance of the battery when it is getting weak and at the end of its life.
The 100u is providing the pulses of high current when the battery is weak. It also reduces the amplitude of the pulses on the power-rail, as these pulses will be sent back to the front-end and cause motor-boating.
This type of amplifier has a very high gain and even the smallest signal from the output will cause instability.
To reduce this a second decoupling arrangement is provided for the microphone and first transistor.
It consists of a 47u and 330R resistor.
The resistor increases the effectiveness of the 47u by about 100 times.
It works like this: The resistor and capacitor in series is called a TIME-DELAY circuit. When a peak or pulse appears at the right-hand lead of the 330R, it passes through the resistor INSTANTLY and begins to charge the 47u. Suppose the pulse is 10mV. After one-hundredth of a second the voltage on the capacitor will be 3mV. This means 100Hz signals will be reduced to 30% and any higher frequencies will be reduced to 10% or less. When the current is very small, as in this case, the effect of the two components is to reduce the signals that create a squeal by as much as 99%. They are highly effective. The squeal is completely eliminated.

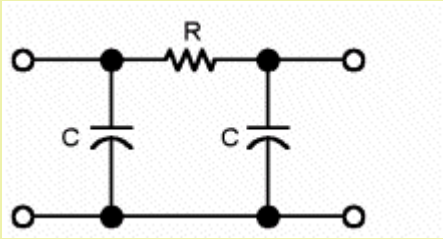

The two capacitors (electrolytics) and resistor form a pi filter. This type of circuit is called a **low-pass filter**, but we are using it to remove high frequencies and we are considering it as a "high-frequency eliminator."
The 330R and 47u are enormously effective in doing this as the calculation for the 330R and 47u show that signals above 10Hz are reduced or eliminated completely. Feedback squeals are 3kHz and above. These signals are completely eliminated.

DECOUPLING A 7805 REGULATOR

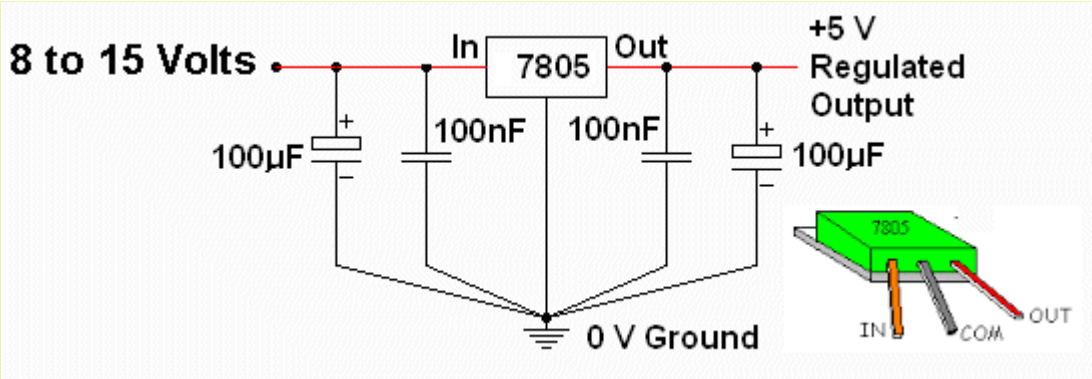

This circuit shows two things.
The 100n on the input and output have nothing to do with filtering or smoothing the voltage.
They are designed to prevent high-frequency oscillations (approx 1MHz) being generated by the 3-terminal regulator.
The regulator is actually a high-gain amplifier and it will produce oscillations if the 100n capacitors are not fitted.
Secondly, the diagram shows that the capacitors should be placed very close to the common lead of the regulator by showing the leads going diagonally to the 0v point. This must be done so they have the greatest effect on eliminating the self-oscillation.
These capacitors are called **DECOUPLING CAPACITORS** because, in electronic terminology, when you isolate a component from a source of interference, it is called decoupling.
Even though the 100u is a much-higher value, it has almost no effect on reducing the self-oscillation.
We mentioned above, the effect of a PC board track on 90MHz frequency.
If the distance between the waveform and the capacitor is long, a signal will be generated by the track.
This time the track is inside the electrolytic. The electrolytic is made up of a spiral layer of foil and a high-frequency signal on the positive lead will not be reduced.
Tantalum capacitors are constructed differently to aluminium capacitors and WILL have an effect on reducing the oscillations.

Another form of Decoupling is BYPASSING. In the following circuit the capacitor is allowing the signal to bypass the emitter resistor and it does this by effectively making the top of the electrolytic equal to the 0v rail. It is does this because the electrolytic takes time to charge and discharge and the emitter thinks it is connected to the 0v rail. It holds the emitter lead tight and prevents it rising and falling.

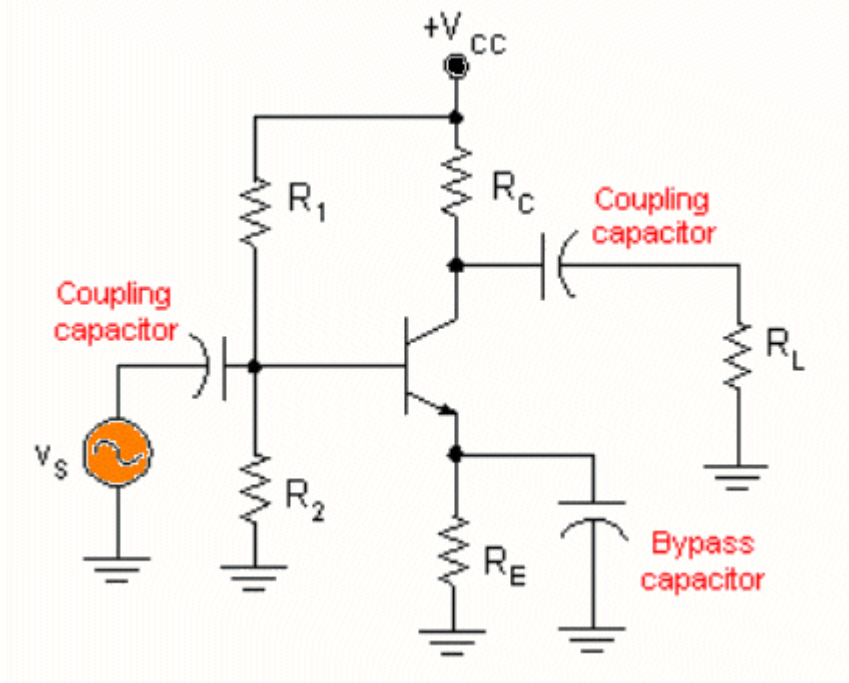

The Bypass Capacitor is called and **EMITTER BYPASS CAPACITOR**

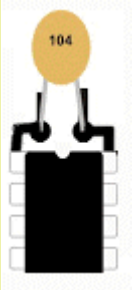

100n BYPASS CAPACITOR

The 100n capacitor connected to the positive and 0v pins of the chip is called a BYPASS CAPACITOR.
It prevents noise on the power rail getting into the chip it is protecting.

Some projects may have 2, 10 or 50 capacitors that are designed to prevent the rails "moving" and prevent spikes and glitches passing from one section to another.
These capacitors are all part of **"DECOUPLING"** and it is a very complex area to discuss as we are talking about very small, high-speed, signals that can create an enormous number of faults.

BREAKDOWN

This is just about the last topic we will be covering, but it is one of the most important characteristics to consider because it is a hidden problem.

It is hidden because a transistor has a number of different ways in which it can fail due to excess voltage. This failure can be CATASTROPHIC and the transistor will be damaged or the failure can be temporary and the transistor will survive when the voltage is removed.

This characteristic can be used to produce a circuit that oscillates. But first we will explain BREAKDOWN:

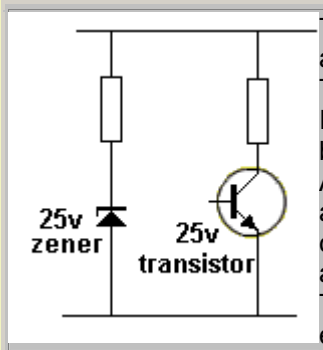

There are two different types of voltage breakdowns in semiconductor devices and the first is called **ZENER BREAKDOWN**.

The other is called **JUNCTION BREAKDOWN**.

In the diagram, the zener is a 25v zener and the transistor is rated at 25v between the collector-emitter terminals. It is classified as a "25v transistor."

As the supply voltage is increased, both devices will "breakdown" at 25v. (or just above 25v), so to explain the result we will increase the supply to 30v. Both components have "broken down" and the zener will have exactly 25v across it and 5v will be across the load resistor.

The transistor will "break down" and **zero volts** will be across the collector-emitter leads and 30v will be across the load resistor.

If we did not include a LOAD resistor, both devices would be permanently damaged because the current-flow through each device would be so large that they would get hot and EXPLODE. With a load resistor included, both devices will not be damaged if only a few milliamps flows through the load resistor. (it is said: they will RECOVER.) The LOAD resistor is also called a CURRENT-LIMITING RESISTOR.

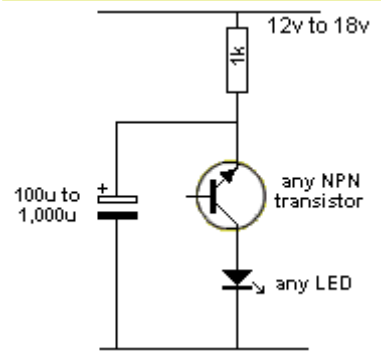

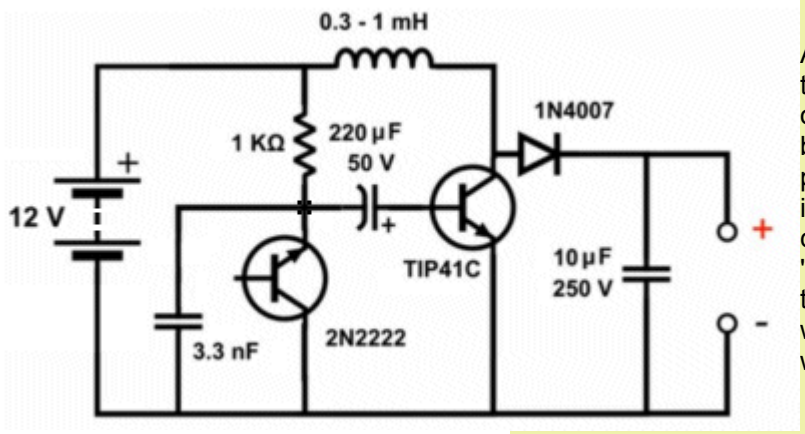

A transistor can be placed in a circuit "around the wrong way" and the a junction inside the transistor will breakdown at a fairly low voltage.

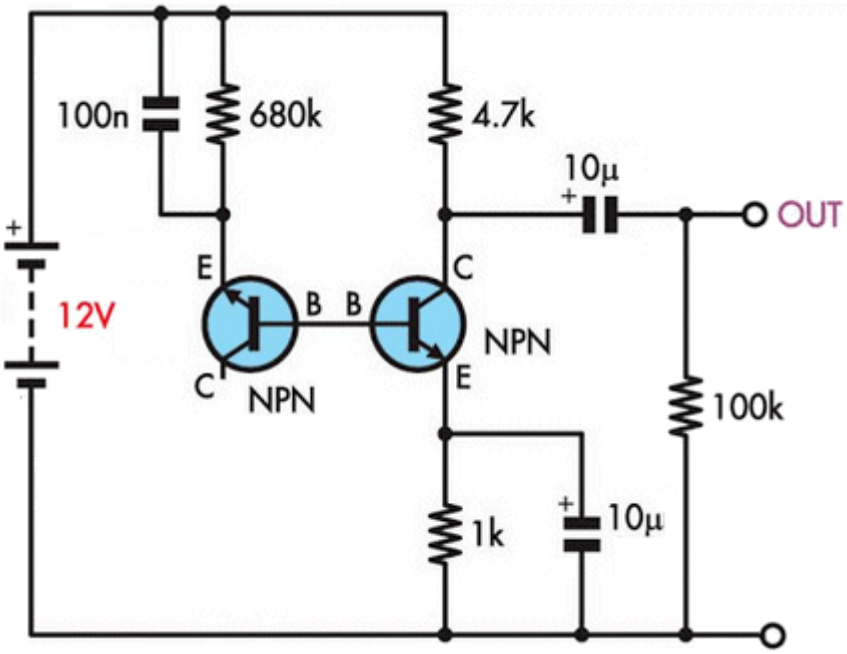

You can try all the different combinations and use almost any type of NPN transistor to see the result.
The electrolytic will charge and when the voltage across the junction of the transistor reaches a voltage between 7v and up to about 18v, the junction will breakdown and pass a fairly high current. This will allow the energy in the electrolytic to illuminate the LED and when the voltage across the electro drops to 7v or so, the junction will suddenly recover and cease to allow current to flow.
This will allow the electro to charge again via the 1k resistor and repeat the cycle of flashing the LED. There are some transistors (Uni-Junction Transistors) that use this feature to produce oscillator circuits.

Here is a circuit using the breakdown of a transistor to produce a frequency to drive the BOOST circuit. The only transistor tried in the circuit was BC547, so try all different types. Some will not breakdown at less than 18v and obviously will not work in this circuit.

The base-emitter junction can also be used but the voltage at which the junction "breaks-down" and the voltage at which it does not conduct is very small.
The difference between these two values can be as small as a few millivolts to about 200mV.
We can use this feature in the circuit on the left. It produces voltage between emitter and base and this needs to be up to above 7v for some transistors to start the process of "breaking down."
This process changes the voltage between emitter and base and thus the flow of current changes. This effect is amplified by the second transistor.
The result is NOISE and because this noise is random, we call it "white noise."

CIRCUIT PROBLEMS:

CIRCUIT 1

The input to a microcontroller needs a HIGH when a microphone picks up audio. This is the requirement from a customer. The circuit in **Fig 104** was designed to meet the customers requirements. The 10mV audio waveform from a microphone is converted to a 4v-5v CONSTANT HIGH. The following circuit is the result:

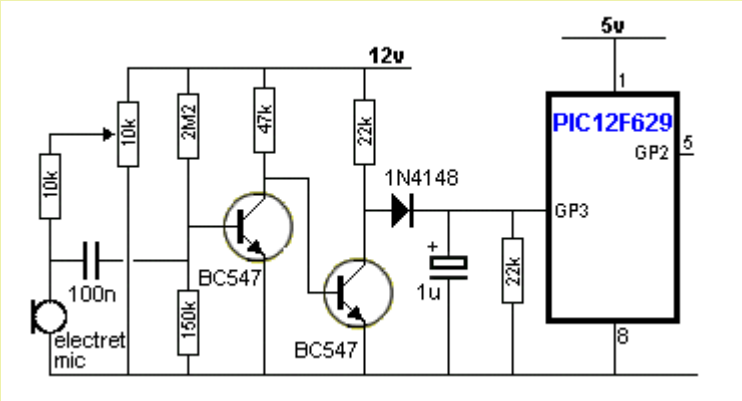

Fig 104.

The starting point is to bias the first transistor so the voltage on the base is just at the point of turning it ON. This allows the 47k resistor to turn on the second transistor and the diode does not see any voltage. This means the 1u does not get charged and the input to the microcontroller sees a LOW.
This is called the QUIESCENT (standing, stand-by or idle) condition.
The gain of the electret microphone is adjusted by the 10k pot and when it receives a loud audio signal it produces an output of about 20mV.
This signal is sufficient to turn ON the first transistor and turn OFF the second transistor so that signal diode sees a HIGH pulse via the 4k7.
This voltage is passed to the 1u and it gradually gets charged. When the voltage on the 1u reaches about 4-5v, the microcontroller sees a HIGH and the program in the micro produces an output.

CIRCUIT 2

How does this amplifier get biased?:

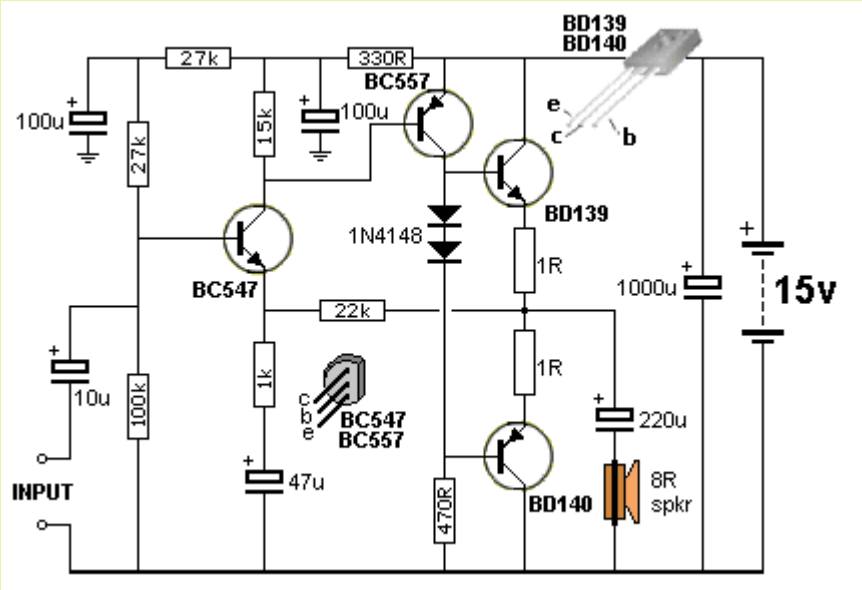

Fig 105.

One of the most difficult amplifiers to design and service is a DC (Directly-Coupled) amplifier. The voltage on the output is fed back to the input to create the idle (quiescent) state and the biasing of the input is created from the output. So, where do you start?
All the facts we have learnt in this discussion are needed to understand how this circuit works.
The circuit has high gain and without the 22k feedback, we would not be able to create an output "set-point." The first transistor has no DC voltage gain as but it does have an AC voltage gain of about 22. The BC557 provides a voltage gain of about 70-100 and the output transistors only provide a current gain. This gives the circuit a voltage gain of about 2,000. A 50mV input will produce an output of about 10v.
The aim is to get the output voltage near to mid-rail so it can swing both positive and negative and create a relatively distortion-less waveform.
The starting point is the voltage divider made up of the 27k + 27k and 100k. This puts 10v on the base of the first transistor.
Now we come to the 470R resistor on the base of the BD140 transistor. This resistor is a very low value and is keeping the BD140 turned ON and the emitter voltage will be very small.

Here's the interesting part: The collector of the BC557 can pull the base of the BD140 UP without any difficulty to about 1.4v less than the positive rail, due to the two 1N4148 diodes.

The Two Biasing Diodes
These two diodes prevent both output transistors turning ON at the same time. If the transistors are both turned ON at any point in the cycle, a very high current will flow and create a short-circuit.
How do the diodes work?
Let's remove the diodes and see what happens.
The

and also due to the base-emitter voltage-drops across the two output transistors. But this only raises the collector **about 1.4v**.
To be able to pull higher, the transistor must turn on harder and since the bottom transistor is being pulled down by 470R, the top transistor is also being pulled down via the two 1R resistors. The BC557 sees the base of the BD139 as a 470R resistor, plus the actual 470R resistor. This make it 220R.
To raise the voltage on the base of the BD140, requires current through the 470R and the BC557 needs to be turned on a certain amount to provide current through the 470R and into the base of the BD139 AT THE SAME TIME.
At the moment the join of the two one-ohm resistors has a very low voltage on it and the BC547 is also an emitter-follower and the emitter is about 10v minus 0.7v.
This puts a current through the 22k resistor of less than 1mA however this current also flows through the emitter-base junction of the BC557 and if the transistor has a gain of 100, the emitter-collector current can be as high as 100mA.
However the 220R (470R and 470R in parallel) resistor only needs a flow of 22mA to create a voltage of 5v across it, so we have plenty of gain to begin to turn on the circuit.
The BC557 creates a current-flow through the 470R and the BD140 starts to get pulled UP. This puts less current though the BC547 and less current through the base of the BC557, so the BC557 starts to turn off.
The actual settling-point has a lot to do with the 27k + 27k and 100k base-bias resistors as this puts 10v on the base and the emitter 9.3v. Suppose the output settles at 7.5v. This puts 1.8v across the 22k and creates a current-flow through this resistor. Approximately the same current flows through the emitter-base of the BC557 and about 100 times this current is available to be divided between the 470R and base of the BD139. This is how the output becomes biased at very nearly half-rail voltage.

CIRCUIT 3

Select the best circuit between Figs 106 and 107:

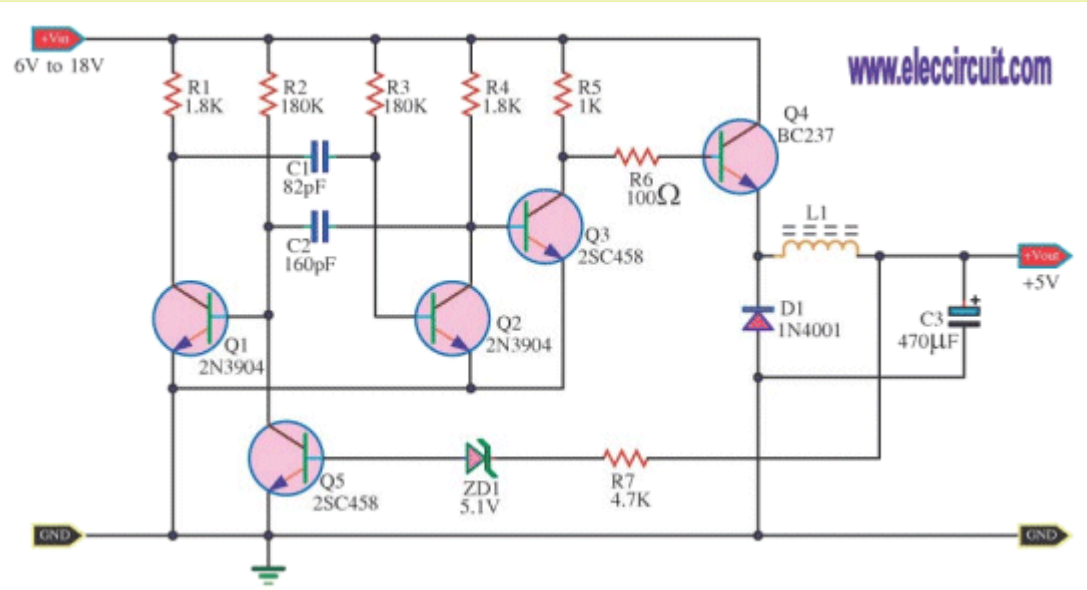

Fig 106.

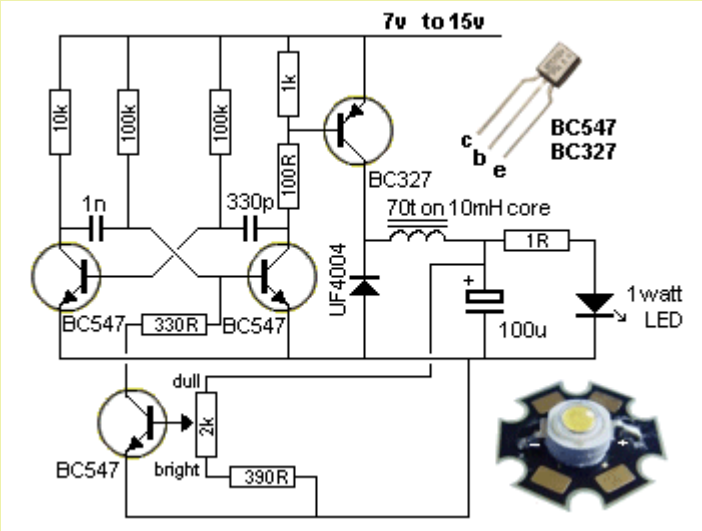

Fig 107.

From the theory discussed above, can you see the problem with driving the BC237 in **Fig106**.
It is being pulled HIGH via the 1k resistor. If the transistor has a gain of 100, Q4 will effectively be equal to a 10 ohm resistor. For 100mA current delivered to the output, 1v will be dropped across this transistor and it will start to get hot. This is wasted energy.
A BC237is only capable of delivering 100mA.

Fig 106 has been re-drawn as **Fig 107** with improvements and corrections.
The output transistor has been changed to a BC327. It will handle 800mA.
A 1N4001 is not a high-speed diode and using an Ultra Fast 4004 will deliver an extra 50mA to the output.
See: 200 Transistor Circuits for details.

CIRCUIT 4

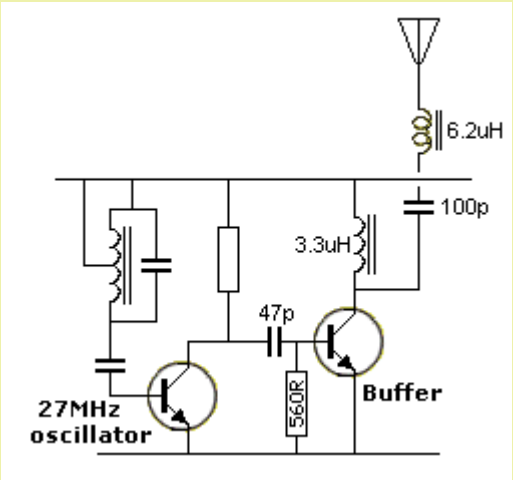

Fig 107a.

Fig107a shows a 560R resistor to discharge the 47p coupling-capacitor.
The circuit is a 27MHz transmitter with buffer. The buffer is an amplifying stage to increase the output.
You will notice two things: the buffer stage is not biased ON and a low value resistor is connected between base and 0v rail. This called a "Class-C" stage.
This resistor discharges the capacitor so it will transfer the maximum amount of energy (on each cycle), from the oscillator stage to the output stage.
The resistor is not needed when charging the capacitor but it is very important to discharge the capacitor.
Remove the resistor and the output will be nearly ZERO!

Another point to note with a **"Class-C" stage** is this:
All the energy to turn-on the Buffer stage comes from the coupling capacitor.

CIRCUIT 5

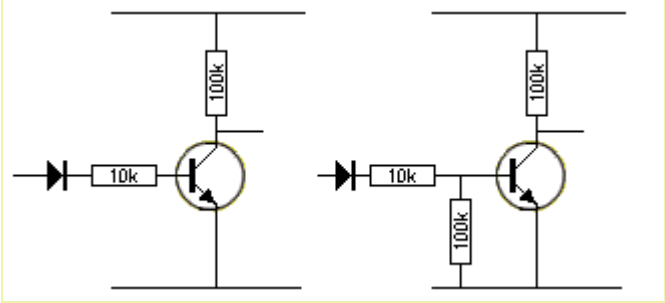

Fig 107b.

Fig107b shows a transistor that is turned on via a diode on the base.
This is a BAD design. The transistor is said to be in a HIGH IMPEDANCE STATE, when not turned ON.
This means the base is FLOATING when the anode end of the diode is at 0v.
When the anode of the diode is LOW, it does not deliver any voltage to the base and the effective resistance on the base is infinite and any noise picked up by the base

The high-value collector load also gives the transistor in the first circuit a high possibility to pick up noise on the base and produce pulses on the collector.

infinite and any noise picked up by the base will turn the transistor ON. To prevent this from happening, a 100k resistor is connected between base and 0v rail.

CIRCUIT 6

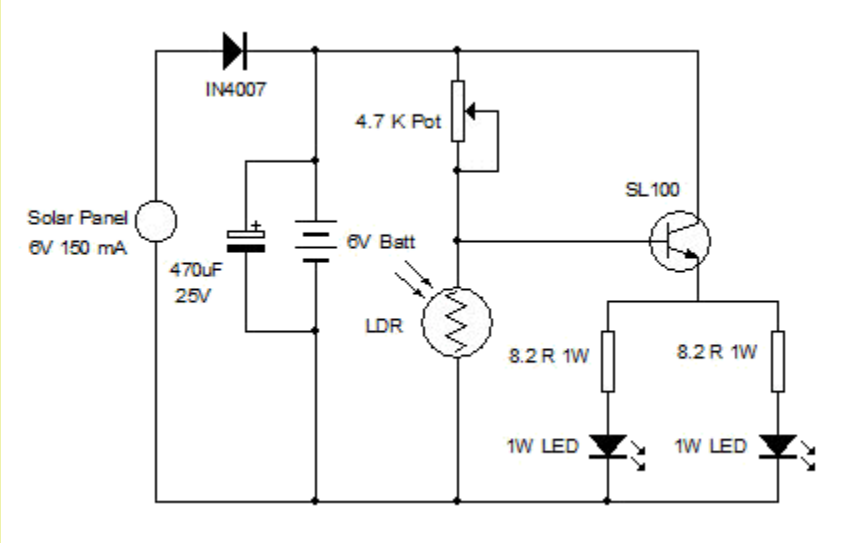

Solar Night Light

Here is a poorly-designed circuit.
A 1 watt white LED has a characteristic voltage of 3.2v to 3.6v and it takes 300mA. The voltage drop across 8R3 will be V=IR =.3 x 8.2 = 2.46v The base voltage will be 3.2 + 2.46 + 0.7 = 6.36v
The LEDs will not turn on very brightly. A white LED will start to turn on at a lower voltage but the full brightness is not achieved until 300mA is flowing and this will produce a voltage of about 3.2 to 3.6v across the LED.
There is another major fault with the circuit.
The transistor is only designed to pass 500mA. It is over-stressed. The base current will be about 20mA to 40mA. This current must be supplied by the 4k7 pot.
This current is too much for a pot.
Secondly, the current must flow through the LDR when it receives illumination, so that the current is removed from the base of the transistor. This current is too high for the LDR.
You can learn a lot from other designer's mistakes.

CIRCUIT 7

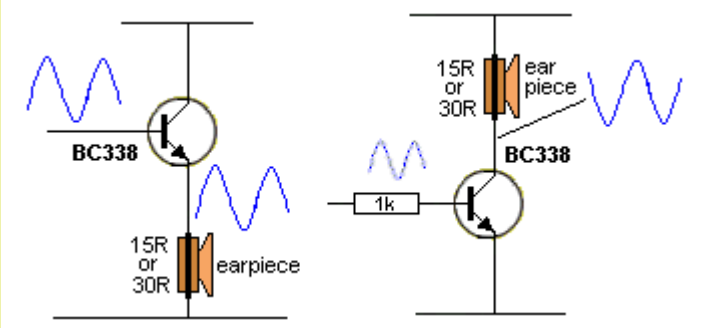

Anil wanted to increase the volume from his mobile handset using a single transistor and a few components.
He has a choice of using an emitter-follower or common-emitter amplifier, as shown in the two circuits.
The first circuit will only increase the current.
The second circuit will increase the current AND the voltage of the waveform and is the best circuit to use.

CIRCUIT 8

This circuit is a "semi-bridge-configuration.
But it does not have an emitter resistor. The emitter resistor allows the stage to self-adjust the current through the collector-emitter of the transistor to produce an approximate mid-rail voltage on the collector.
Without this resistor it is very difficult to produce mid-rail voltage when the supply rail can vary from 12v to 18v and the gain of the transistor can be anything from 100 to 300.

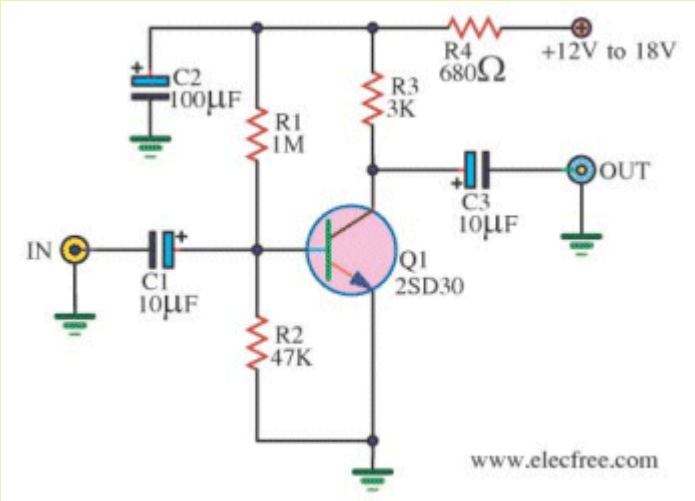

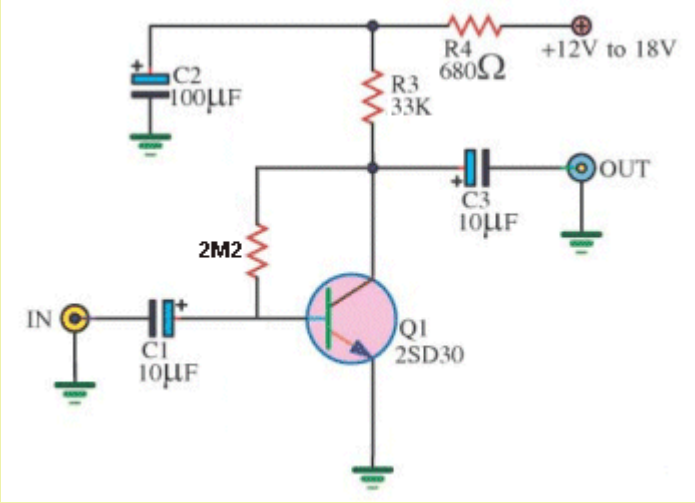

The solution is to change the biasing to SELF BIAS.
This involves a resistor from collector to emitter. The stage will now have a voltage on the collector and by testing a number of transistors, you can determine the correct value for the base resistor.

There is one other fault with the circuit. The load resistor (3k) is too low.
The circuit is a pre-amplifier and if the collector resistor is increased to 33k, the output signal will be increased 10 times.
It works like this: The incoming signal supplies a small current and this is amplified by the transistor (about 100 times) to produce a current in the collector-emitter circuit. This current flows through the collector-load-resistor and produces a voltage across it. If the resistor is a high value, the voltage produced is high and thus the waveform is high and thus the stage produces a HIGH GAIN.

CIRCUIT 9

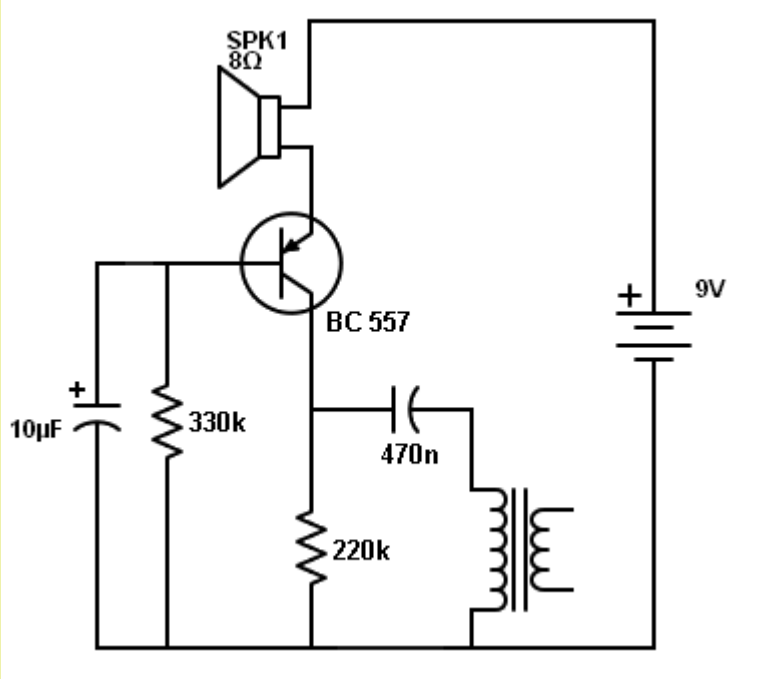

This circuit is unusual in appearance but it does NOT work.
The transistor is in a COMMON-BASE configuration and we have seen this using an NPN transistor.
You need to turn everything up-side-down to work with a PNP transistor.
The problem lies in the value of the 220k resistor. The value is TOO HIGH.
If the transistor has a gain of 330, it will convert the 330k to 1k and become a 1k resistor.
1k in series with 220k means very little voltage will be dropped across the 1k and the collector voltage will be about 9v.
This means the 470n will be fully charged.
Suppose the transistor turns OFF fully.
The 470n is discharged via the 220k.
When the transistor turns ON, it can only charge the 470n with the energy that has been removed by the 220k.

This means that although the transistor can theoretically act as a 1k resistor, in reality it is only as good as a 220k and it will deliver very little energy to the 470n.
The 220k resistor needs to be reduced to 1k to deliver the maximum energy to the 470n.
The transistor can only CHARGE the 470n. The collector resistor DISCHARGES the 470n.

CIRCUIT 10

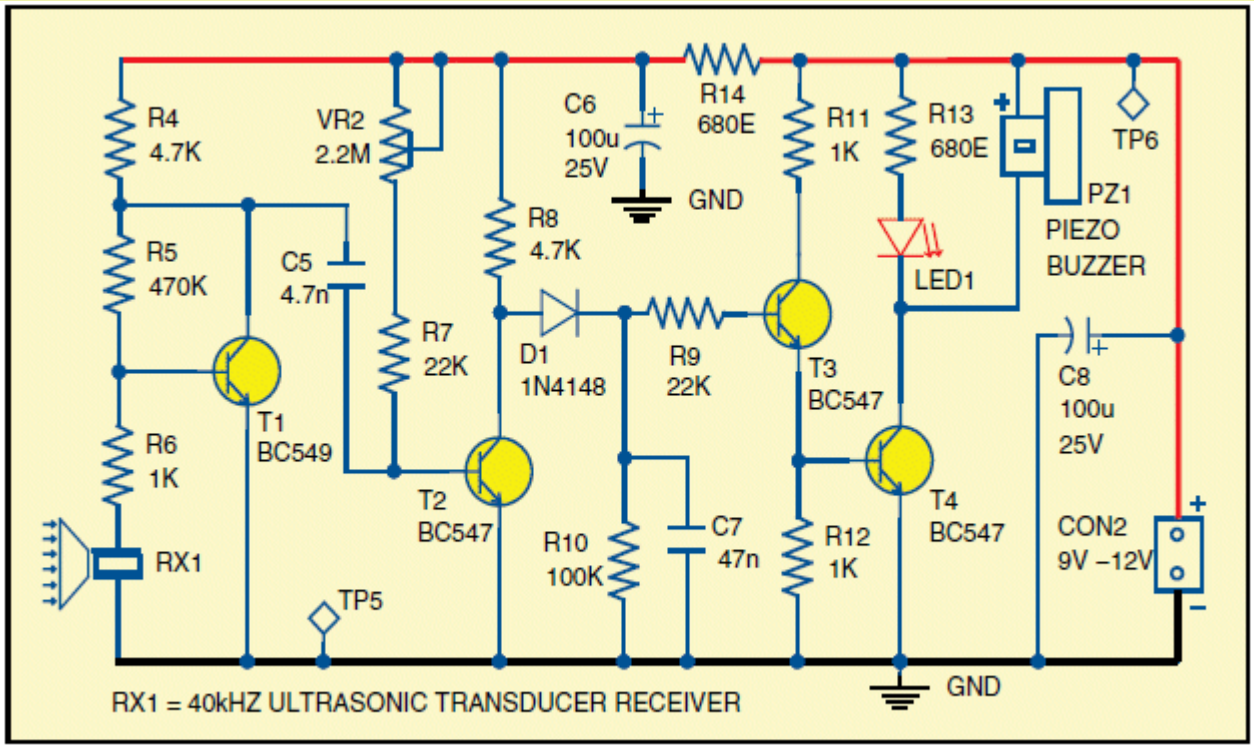

Fig. 2: Circuit diagram of the receiver

This circuit above is poorly designed and has a number of fundamental faults.
You can learn a lot from other peoples mistakes and this is a good example.
NEVER try to control the bias on a stage via the base resistor. This applies when the resistor is connected between base and positive rail. See more on this type of biasing HERE.
This resistor operates entirely differently to a resistor between collector and base.
A resistor between collector and base operates as a NEGATIVE FEEDBACK resistor and adjusts the voltage on the collector to about mid-voltage when the correct load resistor is used and the appropriate base resistor is selected. When this resistor is changed, the voltage on the collector changes a SMALL AMOUNT.
But when the resistor in the circuit above is altered, the collector voltage changes a VERY LARGE AMOUNT.
The arrangement above is NOT a self-biased stage and getting the transistor to a point where it will produce the highest gain is a very difficult thing to do.
The highest gain is when the voltage on the collector is mid-rail, but we need the transistor to have a collector voltage below 1.8v so the final stage is not tuned ON. The voltage cannot be mid-rail.
This means we need to deliver extra current into the base to turn the transistor ON more so the collector voltage is reduced.
This means, to activate this stage, we need to deliver more energy from the 4n7 in the form of a negative pulse, to turn it OFF and allow the 4k7 to deliver current to the stages that follow.
This means the first transistor has to turn OFF more so the 4n7 can charge to a higher voltage so that when the first transistor turn ON, the higher energy will be delivered to the base of the second transistor to turn it OFF. (In other words, the energy from the 4n7 reduces or removes the current delivered by the 2M2 resistor.)
Having the 2M2 as a manual adjustment will decrease the gain of the two stages considerably.
If you turn the transistor ON too hard, the circuit will require a lot of energy from the 4n7 to remove this turn-on current to turn the transistor OFF.
This is the first major fault.
The next point to note is the sensitivity of the diode pump has been reduced by the inclusion of the third transistor. This transistor is an emitter-follower and does NOT assist in the operation of the circuit. In fact it reduces the sensitivity of the circuit. It adds an extra 0.6v to the requirement of the diode pump.
The diode pump is perfectly capable of turning ON the output transistor without the need for the current-amplification of the third transistor.
The output transistor only requires a very small current into the base to operate the piezo sounder (less than 0.5mA) and the 4k7 will deliver this current.
With the third transistor removed, the output transistor is turned ON via the 4k7 on the collector of the second transistor.
The 1k on the base of the output transistor is far too low for a transistor delivering 50mA collector current and should be 10k to 47k.If we do this, we have already increased the gain of the circuit by 10 times to 47 times.
If the second transistor is AC coupled, ALL of the signal from the 40kHz transducer will be passed to the diode pump.
If the signal on this transistor is 1,500mV, the output will respond if the third transistor is removed.

This requires 30mV into the base of the second transistor.
To get 30mV on the collector of the first transistor the transducer needs to produce less than 1mV. This will be the maximum sensitivity for the circuit and it is AUTOMATICALLY self-adjusting and AUTOMATICALLY delivering the maximum overall gain without any need for adjustment.
This is how to work out the requirements of the circuit.
It is a **VOLTAGE REQUIRING** circuit not a **CURRENT REQUIRING** circuit.

CIRCUIT 11

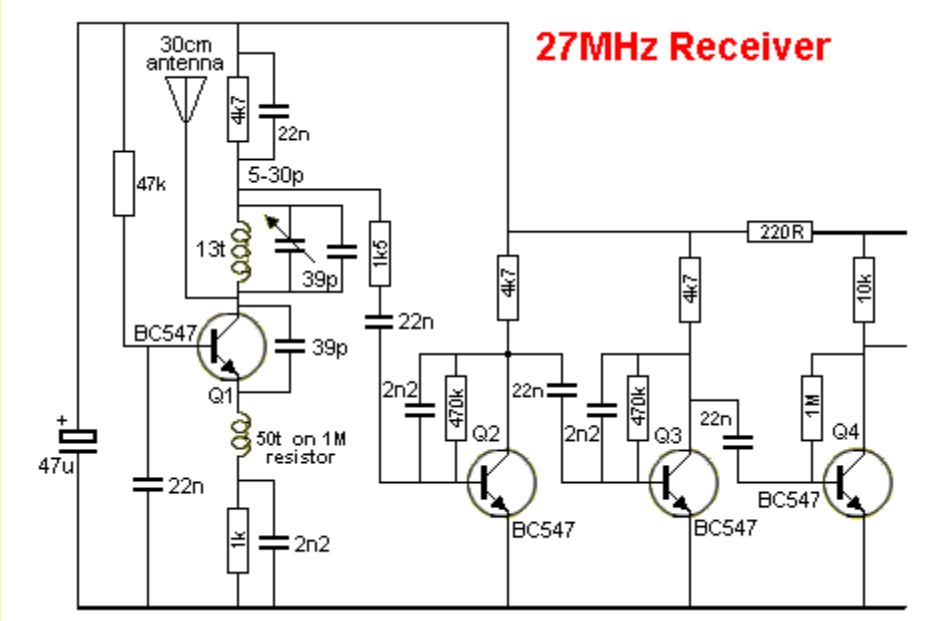

Here is a description of the circuit above, including an understanding of how the two "coils" work in the first stage:

THE "FRONT-END"

The secret to getting a long-range 27MHz link is a powerful transmitter and a sensitive "front-end" on the receiver.
A 27MHz transmitter of only a few milliwatts (10 to 30 mW) will reach 100 metres providing the receiver has a very sensitive FRONT END.
The Front End is the first stage of a receiver.
In our case it is a very weak 27MHz oscillator and thus it is actually a 27MHz transmitter (or more accurately - a 27MHz radiator) as it fills the surroundings with a 27MHz signal.
When another 27MHz signal enters this field it upsets the transmission of the receiver and increases the amplitude of the oscillator. This has the effect of producing a cleaner signal and the background noise or "hash" is reduced.
This is a very clever way of making the front-end very sensitive as it takes a lot of energy to "excite" an oscillator that is sitting in a dormant condition. It is also very difficult to get an oscillator to sit in a condition that is just before the point of oscillation. So we cause it to oscillate at a very low level and an incoming signal will increase the amplitude.
The fact that the transistor in the front end is oscillating can also be referred to as a REGENERATION circuit as the output of the transistor - at the collector - is fed back into the circuit via the 39p between the collector and emitter.
The signal delivered by the 39p is prevented from being lost to the 0v rail by the 50 turn inductor. This is called "emitter injection" as the transistor is configured as a common base amplifier in which the base is held firm by the 22n and the signal fed into it via the emitter.
The operation of the circuit is kept at a low amplitude and when the antenna picks up a signal of exactly the same frequency, the amplitude increases. This is called SUPER REGENERATION or increase of the regeneration.
It is a very simple way of getting an enormous result from very few components. Normally you would require 2 or more stages of amplification to produce the same result.
The only problem with a SUPER REGENERATIVE circuit is the background noise it produces. But since this project is designed only to activate a load, this background "hash" is not a problem. Nearly all the background noise is removed by the feedback capacitors on each stage.
A capacitor placed between the collector and base of a transistor has an enormous effect on reducing the high frequencies.
That's why a small capacitor such as 2n2 can be used. The gain of the transistor (about 70) multiplies the

effective resistance (impedance) of the capacitor by about 70 and the background noise is removed because it mostly consists of high frequencies.
But there is still a lot of skill to get the front-end to oscillate very lightly, while being sensitive to signals coming from the antenna.
A high-value resistor in the collector only allows a small current to flow and if the supply voltage is high, this produces a circuit that will oscillate with a small waveform and can be easily "upset" or "modified" by an injection at the highest point of oscillation. If this injection is timed accurately, it will increase the amplitude of oscillation and the high voltage supply will allow this to occur.

The output of the front end is taken from the collector of the transistor - but not directly from the collector as this would load the circuit and stop it oscillating. The top of the oscillator coil will have a small percentage of the waveform (that is generated on the collector) and we can amplify it via three stages of amplification. The important thing is we can only pick off a very small percentage of the energy from the oscillator so the front end keeps oscillating.
The signal appearing at the "pick-off" point consists of:
1. - 27MHz frequency called the "carrier frequency,"
2. - a lot of noise and "hash" produced by the circuit and also from the antenna picking up background noise from the surroundings and
3. - a tone from the transmitter.
The tone is about 1kHz and its frequency is considerably different to a 27MHz frequency so a simple PASS FILTER can be used to remove the 27MHz and only allow the tone and noise to pass to the next stage.
The component that does this is the 22n across the 4k7 in the supply-line.
This capacitor effectively passes (shunts - removes) the 27MHz to the positive rail where it is passed to the 0v rail via the 47u electrolytic. Thus it NEVER gets passed to the amplifying stages.
We only want to VERY LIGHTLY load the front so we don't stop the circuit oscillating.
We do this by using a resistor and capacitor in series.
If we just use a capacitor, the "resistance" of the capacitor will be quite small at some of the frequencies of the "hash" and it will load the circuit and reduce the amplitude when a signal is being received. Even though the top of the oscillator coil is connected to "earth" via a 22n, another 22n "pick-off" will reduce the signal slightly as it will have a "resistance of about 5k to 7k because it is only passing audio frequencies. To increase this resistance we add a resistor in series with the "pick-off" capacitor.
The combination of the resistor and capacitor in series reduces the LOADING effect.
We now have a very small signal that can be amplified by the following 3 stages.
The second transistor amplifies this signal and removes a lot of high frequencies (hash) via the 2n2 feedback capacitor.
The third transistor does exactly the same and we finish up with a signal that is almost equal to rail voltage from the fourth transistor.
We need a very high amplitude signal for the PIC12F629 microcontroller. That's why there are three stages of amplification.
The microcontroller counts the number of cycles in 100mS and determines if the tone is from button A or B.
We could have a count in 10mS because the two frequencies differ by 100%, and this is something you can do when you start writing your own programs for a microcontroller.
It also counts in increments of 100mS and if the signal is present for 5 x 100mS, it is counted as a long pulse.

THE INDUCTOR

The inductor on the emitter of the transistors plays a very interesting part in the operation of the circuit.
The transistor is configured as a COMMON BASE amplifier and the base is held rigid by the action of the 22n on the base.
Amazingly, this capacitor has a "resistance" of less than 0.5 ohm at 27MHz and so you can see the base is held firmly.
The signal on the collector is passed to the emitter via a 39p and its "resistance" is about 150 ohms at this frequency. So you can see the signal on the collector has a fairly low resistance path to the emitter and this capacitor will have an effect on the amplitude of the signal on the collector.
However this capacitor does two things. It turns the transistor ON more and it turns the transistor OFF.
Let's see how the capacitive reactance (the resistance at 27MHz) has an effect on the amplitude of the signal.
We know the base is held rigid but the emitter is also held rigid when the signal is not increasing or decreasing.
It is held rigid because the inductor has a very small resistance (3 ohms) and the 2n2 capacitor between the inductor and 0v needs time to charge and discharge and so it also holds the voltage on the emitter at a rigid potential.
But let's look at the effect of the base-emitter junction. When the 39p tries to LOWER the voltage on the emitter, it has the effect of turning the transistor ON more and the base-emitter junction acts like a very low resistance. This means that when the voltage on the collector is reducing, the 39p acts like a very low

resistance to lower the voltage on the emitter and the voltage on the emitter drops by only a few millivolts.
During this time what is the inductor doing?
To answer this we will explain how a capacitor and inductor works.
A capacitor is like smashing up against your opponent in a football match. He wont let you pass him and he grabs on to you so you cannot back away.
That's what the 2n2 capacitor does when it sees an increasing or decreasing voltage. It RESISTS the increase or decrease and the top of the capacitor is just like connecting to the 0v rail.
But an inductor is different.
It's like your team mate lifting you up to reach the ball when you charge at him.
If you supply an increasing voltage to one end of an inductor (the other end is at 0v), the inductor will produce a voltage of the same amplitude and it will seem the INDUCTOR HAS DISAPPEARED !
This is the most important concept you will learn about inductors. Once you realise the inductor disappears, you can see how it has no effect on reducing the signal.
That's exactly what happens in this circuit.
The inductor allows the signal through the 39p to have an effect on controlling the voltage on the emitter without absorbing any of the energy.
The inductor does not have any positive effect on the circuit, is just does not have any loading effect.
In other words, the voltage developed across the inductor does not add to the waveform. But the coil on the collector DOES have an effect on the amplitude of the waveform.

THE TOP INDUCTOR

The top coil (inductor) is actually part of a building block (circuit) called a TANK CIRCUIT.
It just needed a capacitor to be called a tank circuit. The capacitor can be in series or parallel, but it is normally a parallel circuit. This name came from the early days of radio where they realised the coil and capacitor stored energy during the first part of the cycle and released it during the second half. It stored energy like a water tank.
This coil works in a completely different way because it has a capacitor connected across it.
The bottom inductor acts like a HUGE opponent that NEVER lets you through.
The top coil acts like a much smaller opponent that you can reason-with and create a double "high-five." The transistor delivers energy to the coil and it produces a voltage on its lower lead so that the voltage across the coil is equal to about rail voltage.
The transistor now turns off and the magnetic flux created by the coil collapses and produces a voltage in the opposite direction and this voltage charges the capacitor across the coil.
This reverse voltage can be equal to about rail voltage.
This means the amplitude of the positive voltage and the amplitude of the negative voltage can be as high as twice rail voltage and this signal is passed to the antenna. In our case this amplitude is much smaller, but for a transmitter, the amplitude can be 2 x rail voltage.

THE OSCILLATOR

The first transistor is a 27MHz oscillator.
How does it oscillate?
It oscillates because a signal from the output is fed back to the input.
The feedback signal must be POSITIVE FEEDBACK. Negative feedback will not start an oscillator operating and any negative feedback fed to an operating oscillator will reduce the output and may even kill the oscillator.
So we need POSITIVE FEEDBACK. But this is not the complete answer. The feedback signal must deliver slightly more energy than the transistor requires, at each part of the wave. As the transistor turns ON more and more, it requires more energy from the feedback signal to do this. That's why the value of the 39p feedback capacitor is larger than necessary.
Suppose we use a 10p capacitor, the transistor will turn on and feed some of the energy from the collector to the emitter. But as it turns ON more, the base-emitter junction requires additional energy and the 10p cannot provide this. The result is the transistor does not turn ON fully and it stops oscillating. Alternatively, it may oscillate but at a lower amplitude.
The feedback capacitor will turn the transistor ON faster than we require.
We want a 27MHz oscillation.
To get the transistor to turn ON and OFF at the required frequency, we have two components on the collector.
These two components are a coil an capacitor.
When they are connected in parallel, the coil picks up signals (called electromagnetic radiation) from the surroundings and a very small voltage is produced by the turns.
This voltage is passed to the capacitor and it charges.
When it is fully charged, it sends its energy to the coil and this takes a certain period of time because a capacitor cannot charge and discharge instantly. This energy-flow back and forth produces a microscopic amplitude and if a surrounding signal has a frequency that exactly matches the natural frequency of the two

components, it will increase the amplitude of the signal and continue this oscillatory effect.
The point to understand is this: The coil and capacitor has a natural frequency at which they operate and if we connect them to a transistor, they will output a waveform that is picked up by the feedback capacitor to turn the transistor ON and OFF at the same frequency.
The coil and capacitor form a circuit called a TUNED CIRCUIT and they determine the frequency at which the circuit operates.
The transistor is simply tuned ON and OFF at exactly the time.
There is just one more interesting part to the circuit.
The top of the coil is fixed to the supply rail via the 22n and when the transistor turns ON, the lower end of the coil becomes slightly negative (slightly less than the voltage on the supply rail).
The transistor keeps turning ON until it is fully turned ON. At this point the feedback capacitor stops providing energy to the emitter and the transistor turns OFF a small amount. This reduces the current through the coil and the magnetic flux changes from expanding flux to collapsing flux.
This has the effect of producing a reverse voltage from the coil and now the end connected to the collector has a voltage HIGHER than rail voltage. This voltage raises the voltage on the emitter and has the effect of turning the transistor OFF.
In other words, the transistor is effectively removed from the circuit and the coil/capacitor combination perform their energy transfer as mentioned above.
The end result is a voltage on the antenna that can be twice rail voltage. In our case the amplitude is kept very low but for a transmitter, this voltage can reach twice rail voltage.

THE AMPLIFYING STAGES

The 3 amplifying stages are called self-biasing common-emitter stages.
The base bias resistor is chosen so the voltage on the collector is about half-rail voltage. This allows both the positive and negative excursions of the waveform to be amplified.
We are not concerned with the quality of the signal (the shape of the wave - the waveform - as we only need to produce a maximum amplitude to feed the microcontroller so it can count the number of pulses - waves - per second.
The value for the components for each stage are chosen by selecting the collector load resistor so the average current will be about 0.5mA. We then select base-bias resistors so the collector voltage sits at about 2.5v.
We then input the signal from the front-end and try capacitors for the negative feedback.
Why waste time working out the values mathematically when it only takes 30 seconds to physically fit a component?
After you generate a mathematical answer, you will want to try different values to see the effect and so it's best to just experiment and see the results on a CRO.
You don't know the gain of the transistor so it's pointless using a mathematical equation to get a result.
The feedback capacitor has an enormous effect on removing waveforms such as "hash" that are higher in frequency than the tone signal, but it also reduces the amplification of each stage. So you have to chose between reducing hash and reducing overall gain of the stage.
Each transistor is called a STAGE.
A stage is a self-contained circuit with a capacitor at the input and and output.
This makes the voltages on the stage entirely generated by the components within the stage because the capacitor on the input and output prevent DC voltages on adjacent stages having any effect.
This makes diagnosis and testing very easy.
If a stage is not working, the first thing you do is check the voltage on the collector of the transistor.
If it is too low or too high, the component may be the wrong value or the transistor may have a very high gain or very low gain. The feedback capacitor may be leaky or damaged or the tracks on the PC board may have a splash of solder.
Audio circuits are very difficult to diagnose and our BENCH AMPLIFIER project can be used to listen to the tone entering and leaving the stage.
You can also use a CRO to view the waveform.
If you want to be really technical you can say the 3 transistors form a "Frequency Selective Strip" - the frequencies being selected are LOW FREQUENCIES.

Another question from a reader: **What is the effect of adding the 3v3 zener?**	Circuit A turns on when the resistance of the LDR decreases. Nothing happens until the resistance of the LDR reduces to put a voltage of 0.7v on the base of the transistor. At this point the LDR and 47k form a voltage divider and no current flows into the base. As the resistance of the LDR decreases, current will flow into the base of the transistor and start to turn it ON. Take note of the level of illumination for this to occur. If a 3v3 zener is paced in the base-lead, the resistance of the LDR will have to decrease until a voltage of 3v3 plus 0.7v is developed across the 47k resistor. This means more light will need to be detected by the LDR.

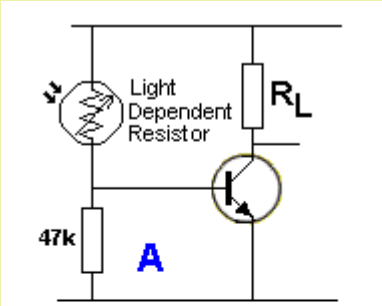

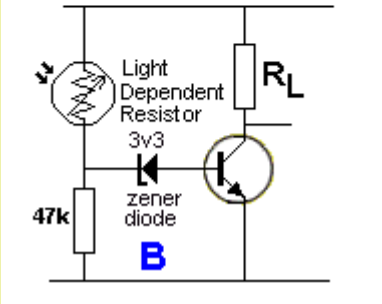

As soon as 4v is reached, current will flow through the zener and into the base of the transistor.
Because the change in resistance of the LDR is not linear, the extra amount of illumination is not known, but it will be more than the circuit above.
Once the transistor in both circuits is turned ON, the same amount of current into the base will have the same effect on the LOAD but since the level of brightness on the LDR is different, it may require additional illumination to produce the same effect in the second circuit.
Instead of fitting the zener, the same effect can be obtained by lowering the value of the 47k resistor.

Question from a reader:

BD139 is a 80v transistor. Can I use BD135 - a 45v device?

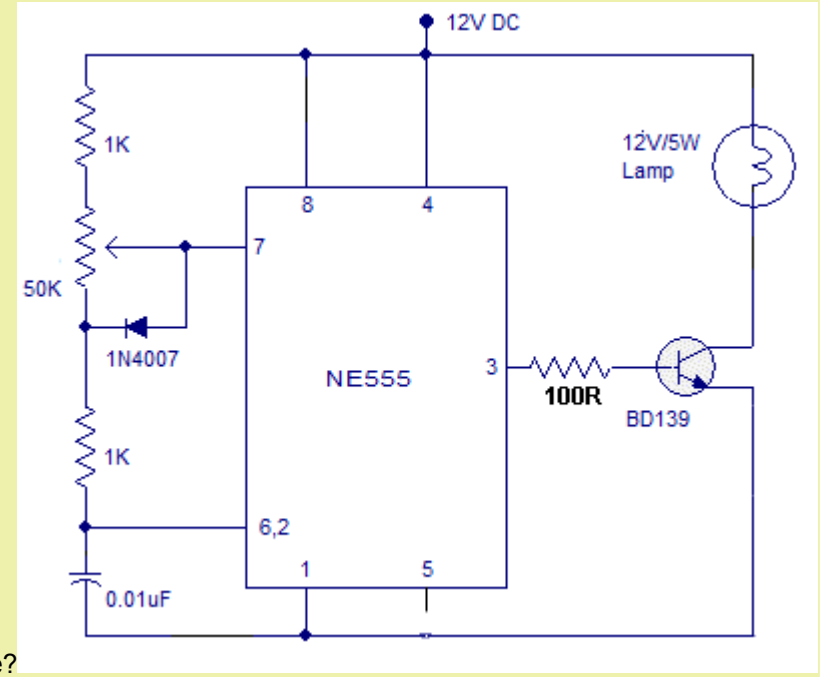

The maximum voltage the transistor will see on the collector is about 12volts, so any transistor with a rating above 25v can be used.

There are no inductors (coils or transformers) in the circuit and thus no spikes will be generated.
In many cases, when an inductor, coil or transformer is present in a circuit, a high voltage spike will or may be produced when the current is switched OFF and this can be up to 100 times greater than the supply voltage.
These spikes can damage a transistor and need to be suppressed (prevented) by using a damper diode (a diode connected in reverse across the coil).
If the spikes are say 70v, an 80v transistor can be used.

LAB ELECTRONICS

Lab Electronics produces a "stand-alone" trainer that covers the **common-base**, **common-emitter** and **common-collector** stages:

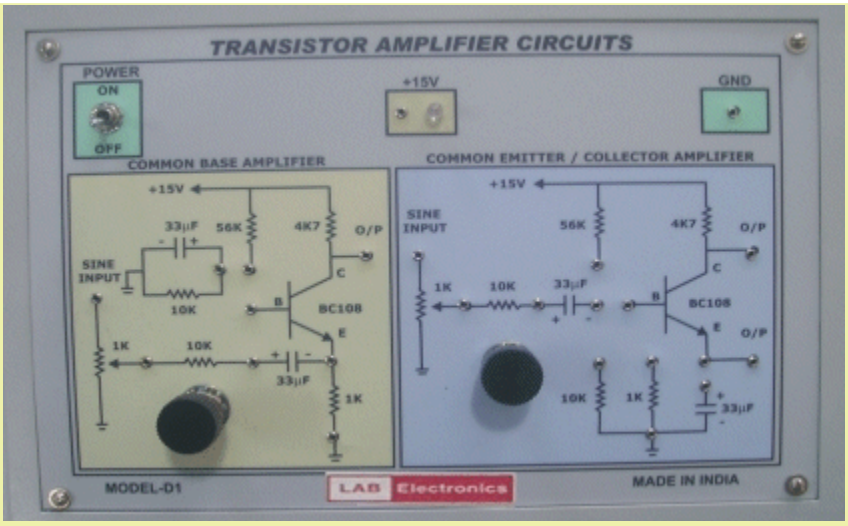

Fig 108.

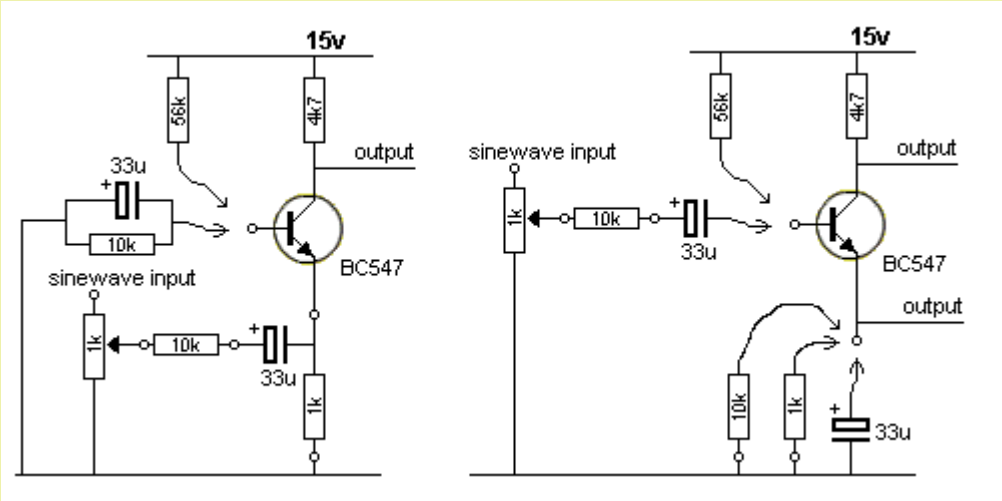

Fig 109.

Fig 109 shows the circuit for the trainer and how it can be wired to produce all the stages we have covered in this discussion. By feeding each stage with a sinewave at the input, you can view the output on a CRO and see how it works. This is only part of the picture to understanding the operation of each stage as the input and output impedances are also important and the third important thing is the effect of the capacitor(s) and/or electrolytics that connect one stage to another and/or those connected to the emitter to provide EMITTER BY-PASS.

We have already explained the advantage of a common-base stage (to connect a very low impedance device to an amplifying circuit) and the advantage of a common-collector (emitter-follower) circuit to drive a low-impedance load. e load.

A "trainer" only provides a fraction of the knowledge needed to understand "circuit-design" - but it helps. You must build "real-life" circuits to get a complete understanding.

The trainer above has lots of faults in its design. You cannot get a full understand of the common-base stage with 1k in the emitter. It should be 100R or less. The 10k feeding the 33u will attenuate the sinewave and is not needed.

The common-emitter stage does not provide any self-biasing option. The 56k base-bias is too low and the collector and emitters resistors are the wrong values to get any appreciable gain from the stage. When the 33u is put across the emitter resistor, the gain will increase enormously.

It would be much better to work on the circuits we have presented above and view the output on a CRO.

This trainer does not give you a full understanding of the operation of the three stages. (33u and 15v is rarely used in modern designs), I would give it a MISS.

Fig 110.

Fig 110 shows another trainer. It covers the common-emitter stage.
When a common-emitter stage drives a transformer or speaker as a load in the collector circuit, we want the sound to be free of distortion and to do this this we must bias the stage so the collector is at half-rail voltage when no audio is present.
This allows the transistor to turn ON and OFF to provide the maximum voltage-swing. If the transistor is not sitting at mid-rail, either the positive or the negative peaks of the signal will hit either the positive or negative rail and produce distortion - because the full excursion (height) will not be reproduced.
But biasing the transistor at mid-rail means the current though the speaker or transformer will be about half the peak current and this is wasted as it flows at all times, even when audio is not being processed.
That's why this type of stage is not efficient and it heats up the output transistor considerably, even with no audio.
This type of circuit is called "CLASS-A" and the trainer above has a "Bridge" circuit as a pre-amplifier and is capacitor-coupled to a common-emitter stage as an output stage - driving a transformer - as a class "A" amplifier. Since transformers are expensive, difficult to purchase and add weight to a project, they have generally been replaced by complementary-symmetry push-pull class-B output stages.
All the features in this trainer have been covered in the circuits above.

Which circuit is best?

Fig 111 shows four different circuits driving a speaker. Which circuit is best??

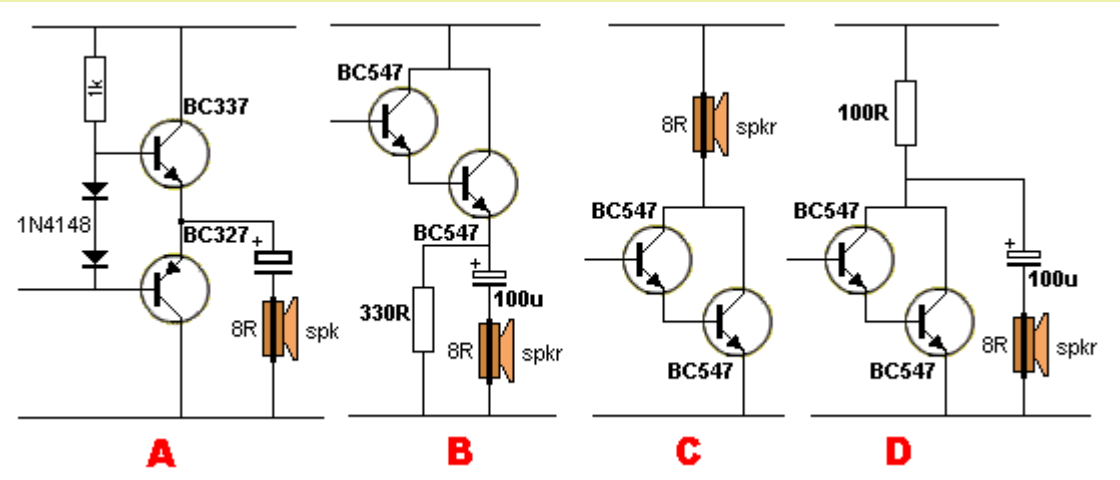

Fig 111.

The 4 circuits in **Fig 111** drive an 8 ohm speaker and are called **OUTPUT STAGES** or **DRIVER STAGES.** They are all different in performance and have different input voltage requirements.
Circuit A is really only a one transistor emitter-follower amplifier as the other transistor discharges the electrolytic.
However it is fully discharged and represents only a few ohms resistance (impedance) in series with the speaker. The input voltage-swing must be as large as possible (called rail-to-rail swing) to

achieve the maximum output.
Circuit B is a two-transistor amplifier (called a **Darlington Pair**) and requires only a very small input current for the circuit to work, but a rail-to-rail voltage-swing. The speaker is AC coupled and only the audio current enters the cone and the cone is not displaced by any DC current. However the 100u is discharged via a 330R and the electrolytic is equivalent to a 330R in series with the speaker. The output from this circuit will be very low.
Circuit C is a **Darlington Pair** directly connected to a speaker. The input is very sensitive and requires less than 1v swing for full output. However DC flows through the speaker and will heat up the coil as well as shift the cone and maybe reduce the output capabilities of the speaker. The BC547 driver transistor will not be able to deliver much current. A BC337 is a better choice.
Circuit D is a high gain **Darlington stage** and has a sensitive input and requires less than 1v for full output. However the electrolytic is discharged via a 100R and this means it is equivalent to a 100R in series with the speaker.
The best circuit is "**A**" but it needs a pre-driver transistor to achieve the gain (amplification) of the other 3 circuits.

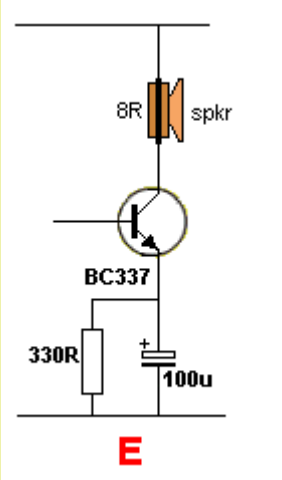

Fig 111a.

Fig 111a is a "Class-A amplifier" with an emitter resistor that is by-passed with a 100u capacitor. The quiescent (idle) current taken by the stage will be low due to the 330R emitter resistor but when a signal is delivered to the base, the transistor will operate as if the emitter is connected directly to the 0v rail. This means the stage will provide very good amplification while the quiescent current is quite low.
Note: **Fig111a** needs to have a base-bias resistor and a capacitor coupling the base to the previous stage, to qualify as a class-A amplifier. If the base-bias resistor is removed, the stage becomes "Class-C" where the stage uses the energy from the previous stage (via the capacitor) to "turn it on."

CLASSES

Here is a discussion on the type of output stages and the advantage and disadvantages of each stage. Output stages are classified as "class-A, class-B" etc and explain how current is "steered," or controlled, within a power amplifier before it is delivered to a speaker load.

Class A is the simplest, most basic topology. Reproduction of music requires speaker motion both in and out. To do this, amplifiers must "source and sink" current. In a Class A amp only one direction of current flow is used. It relies on the movement of the code to return it to the neutral position or movement in the reverse direction due to the inertia of the cone.

To reproduce a sinewave (or similar waveform) the output stage must be biased to half-rail voltage so the waveform can rise and fall. This means the output stage is consuming half-power when NO SIGNAL is being delivered. The heat losses are high but the output is very high quality.

Class B uses two variable output stages, one to source current and the other to sink current.

This topology overcomes the poor efficiency of pure Class A, only delivering power as needed.

Both output stages turn completely off during the time when the signal passes from one output to the other. Time delay and low-level non-linearities cause some distortion, called "crossover distortion," during transition from source to sink output stages. This type of distortion is worst at low output levels. Pure Class B is only used in the lowest-cost, lowest-fidelity designs.

Class A/B is a combination of Class A and Class B. Using two variable output stages like Class B but keeping them from completely turning off, you get near Class B efficiency with near Class A's low-distortion performance.

Class C combines active devices with resonant magnetic components for high efficiency at radio frequencies. This topology is not used in audio-frequency designs. The output stage is not biased, but gets all its drive capability from a previous stage.

Class D uses source and sink output stages that consist of full-on or full-off switches. These output stages toggle from full sink to full source at a rate significantly higher than the highest audio frequency to be reproduced. The ratio of time sinking to time sourcing controls the audio output, with a 50% ratio delivering zero output.

Class D offers significantly higher efficiency than Class B. Losses in Class D designs are limited to turn-on time of the switching devices and resistive losses in these devices and output filtering.

Class D amps require more complex circuit designs with extensive shielding and filtering.

Class G & H are variations on Class B that use multiple source and sink output stages. Low-level signals are handled by one pair of output stages, while higher-level signals are handled by other pairs. Each pair is optimized for the power range it delivers.

More efficient amplifiers can deliver the same output power with smaller transformers and less heat sink.

Circuit complexity increases, which adds cost. Switching distortion similar to Class B's crossover distortion occurs at each output level transition.

Bridge Mode takes advantage of the fact that speaker loads can be driven differentially. Using separate amplifiers to drive both the positive and negative speaker terminals with opposite-polarity waveforms yields an effective doubling of the voltage swing for 4 times the power.

Provides high power levels using lower-voltage components.

Increased circuit cost/complexity and inability to ground reference either speaker lead.

FAULTS

Here is a text book containing a series of questions and answers.:
Self Teaching Guide
I have included it to show you that even electronics authors who have been in electronics for decades, make mistakes.
See the question on base and collector current for a 24v globe. The author has made no mention of the fact that the globe takes 6 times more current when turning ON. That's why you will find the circuit he designed, will not work.
He also describes a two transistor circuit where one transistor turns the other off. This is a very current-wasteful circuit.
He also describes the bleed current for the base (voltage-divider) for a circuit that does not need a voltage divider.

My boss once said to me: "The transistor will never "take-off" it is only equal to a triode (valve)."

After reading all these discussions you will realise how little has been provided in the average text book on designing transistor stages. That's why these articles were produced. They explain this extremely important topic in a completely new way - one that even I can understand . . .
50 years ago I heard an engineer say: It is only a 3 leaded device, like a triode valve: "It will never succeed."